DWG. NO.: **721589-3**

1 5/8-9 TOOTH SPLINE
TORQUE LIMIT 52 FT. / LBS.
AVAILABLE FOR 45 THRU 100 SIZES ONLY

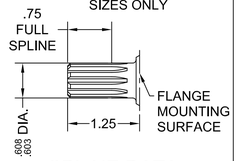

SPLINE DATA
FLAT ROOT SIDE FIT

DIAMETRAL PITCH	16/32
PRESSURE ANGLE	30°
NO. OF TEETH	9
MINOR DIA.	.465-.475

2 7/8-13 TOOTH SPLINE
TORQUE LIMIT 184 FT. / LBS.

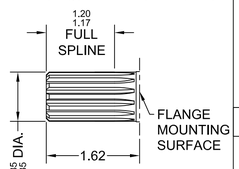

SPLINE DATA
FLAT ROOT SIDE FIT

DIAMETRAL PITCH	16/32
PRESSURE ANGLE	30°
NO. OF TEETH	13
MINOR DIA.	.722-.733

5 7/8" STRAIGHT
TORQUE LIMIT 184 FT. / LBS.

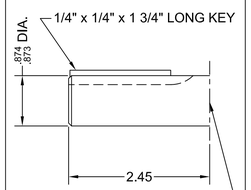

6 3/4" STRAIGHT
TORQUE LIMIT 105 FT. / LBS.
AVAILABLE FOR 45 THRU 115 SIZES ONLY

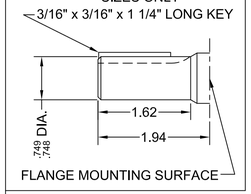

A SAE 2-BOLT 'A' FLANGE

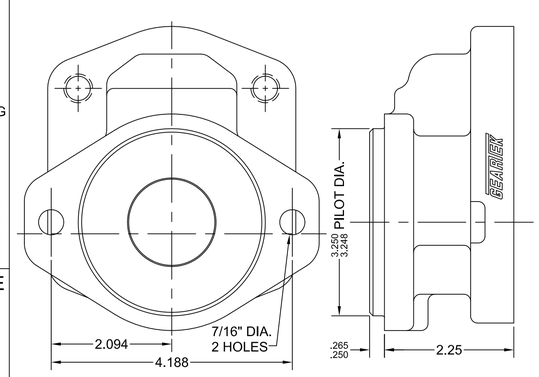

B SAE 2 & 4 BOLT 'B' FLANGE

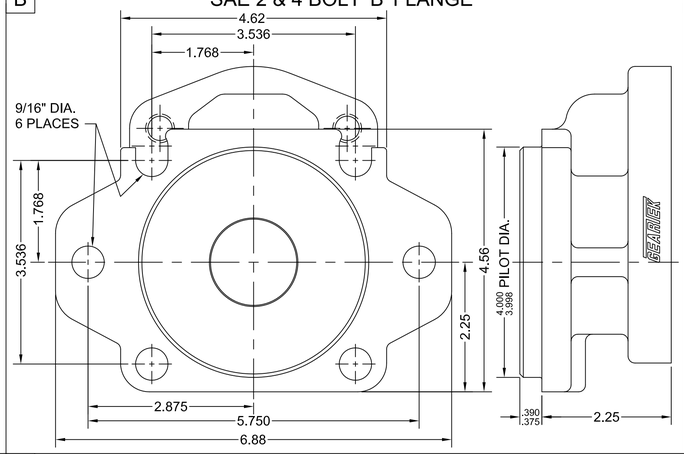

1 REAR PORTED STRAIGHT THREAD

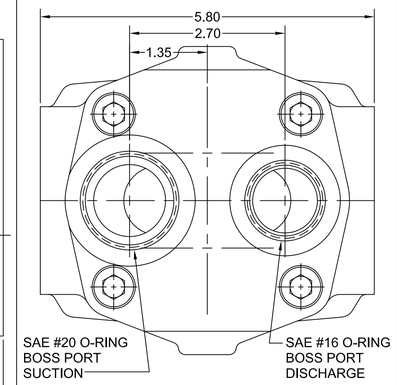

3 SIDE PORTED SAE 4-BOLT CONNECTOR

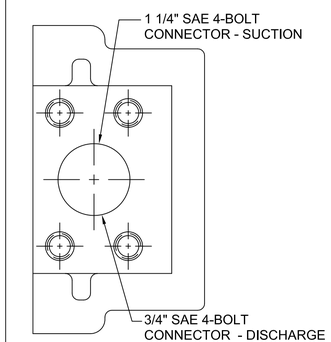

5 SIDE PORTED STRAIGHT THREAD

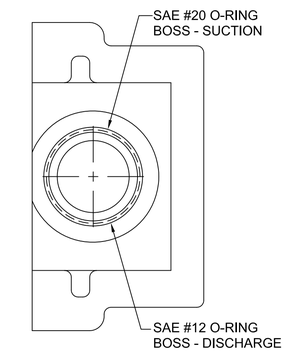

R 6-BOLT ROUND FLANGE

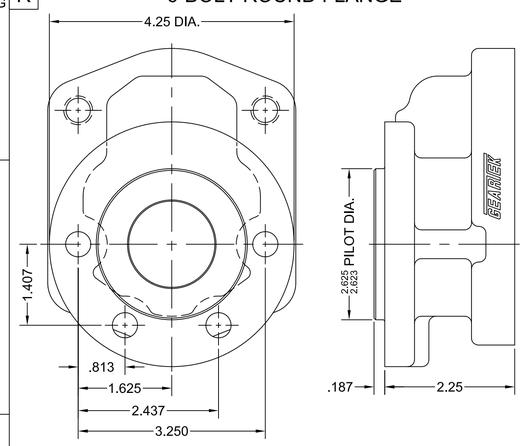

P PTO MOUNT FLANGE
SINGLE PUMPS ONLY

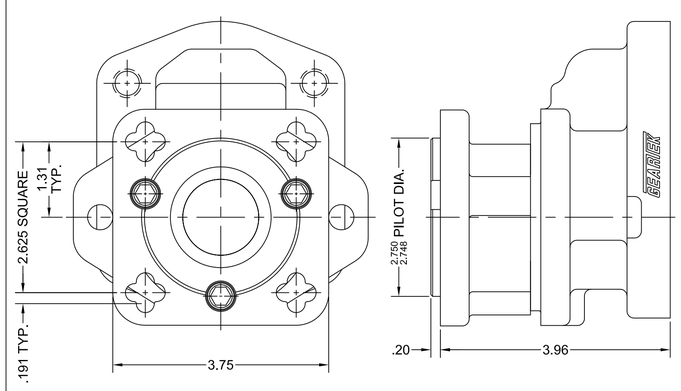

SINGLE PUMPS

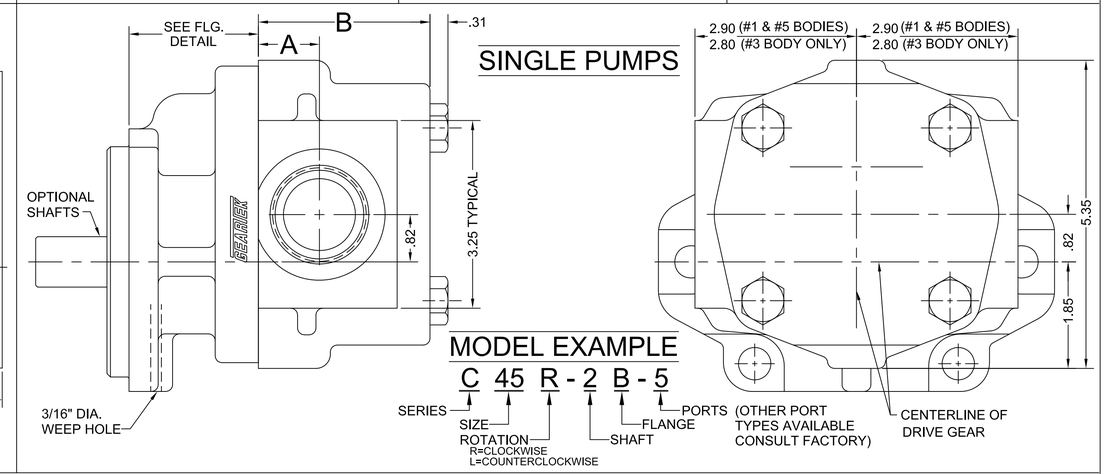

MODEL EXAMPLE

C 45 R - 2 B - 5

SERIES — SIZE — ROTATION (R=CLOCKWISE, L=COUNTERCLOCKWISE) — SHAFT — FLANGE — PORTS (OTHER PORT TYPES AVAILABLE CONSULT FACTORY)

TANDEM PUMPS

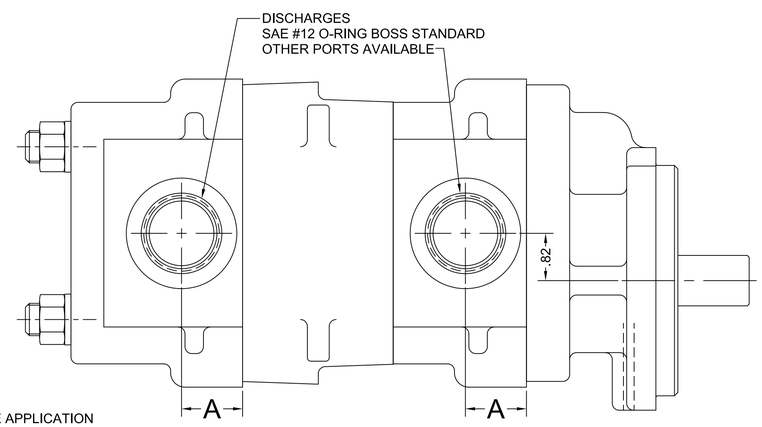

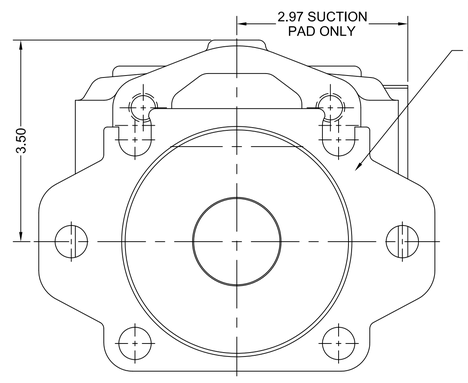

FRONT VIEW

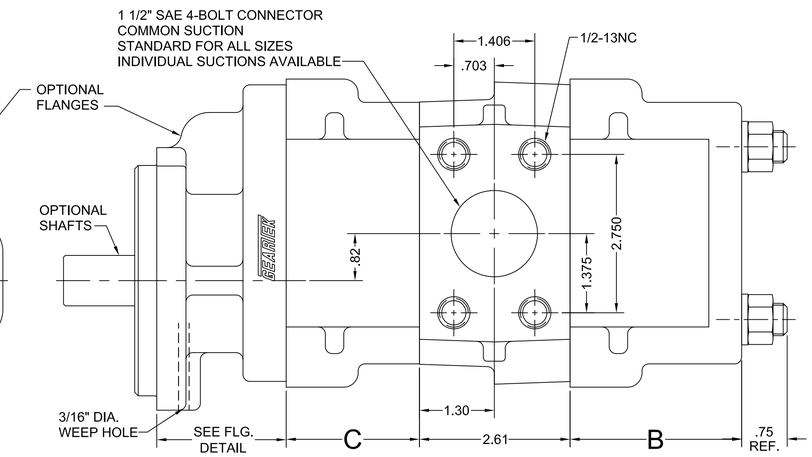

* CONSULT FACTORY WITH TYPE APPLICATION

MOUNTING DIMENSIONS				SPECIFICATIONS							
SIZE	A	B	C	SIZE	U.S. GALLONS	CUBIC INCHES	LITERS	MIN. RPM	MAX. RPM	MAX. PRESSURE PSI	MAX. PRESSURE BAR
C45	1.06	2.98	2.32	C45	.0038	.88	.0144	600	3600	3500	241
C65	1.06	3.20	2.54	C65	.0055	1.27	.0208	600	3600	3500	241
C85	1.06	3.41	2.75	C85	.0072	1.66	.0273	600	3400	3500	241
C100	1.06	3.57	2.91	C100	.0085	1.96	.0321	600	3300	3500	241
C115	1.25	3.73	3.07	C115	.0097	2.24	.0367	600	3100	3000	207
C150	1.25	4.10	3.44	C150	.0127	2.93	.0481	600	2800	2500	172
C180	1.25	4.42	3.76	C180	.0152	3.51	.0575	600	2500	2500 *	172 *
C200	1.25	4.64	3.98	C200	.0169	3.90	.0639	600	2200	2500 *	172 *

MODEL EXAMPLE

C 85-45 R - 2 B - 55

SERIES — SIZE — ROTATION (R=CLOCKWISE, L=COUNTERCLOCKWISE) — SHAFT — FLANGE — PORTS {FRONT + REAR} (OTHER PORT TYPES AVAILABLE CONSULT FACTORY)

SCALE: INCHES 0 1 2 — CENTIMETERS 0 1 2 3 4 5

REV.	BY	CHANGE DESCRIPTION	DATE
4	-	-	-
3	DR	ADDED NO. 1 SHAFT & NO. 3 BODY	06/15/2000
2	DR	ADDED 'R' FLANGE	09/11/1998
1	DR	ADDED PTO FLOANGE 'P'	10/30/1997

SCALE: REDUCED
DWN. BY: DR
DATE: 03/11/1997
CKD. BY: -
DATE:

UNLESS OTHERWISE SPECIFIED:
TWO-PLACE DECIMALS .XX = ±.030
THREE-PLACE DECIMALS .XXX = ±.010
ANGLES = ±5°
RADII .12

Hydraulic Analysis, Inc. retains full proprietary rights to information on this document and reproduction or use thereof is unauthorized without written permission from Hydraulic Analysis, Inc.

GEARTEK® FLUID POWER PUMPS AND MOTORS
DIVISION OF HYDRAULIC ANALYSIS, INC.

TITLE: MOUNTING DIMENSIONS 'C' SERIES

MATERIAL: - -

DWG. NO.: 721589-3

Copyright 2005, Hydraulic Analysis, Inc.

DWG. NO.: **723419-1**

SHAFTS AVAILABLE

1 5/8-9 TOOTH SPLINE
TORQUE LIMIT 52 FT. / LBS.
AVAILABLE FOR 45 THRU 100 SIZES ONLY

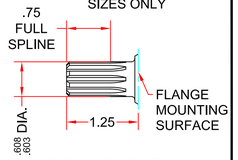

SPLINE DATA
FLAT ROOT SIDE FIT

DIAMETRAL PITCH	16/32
PRESSURE ANGLE	30°
NO. OF TEETH	9
MINOR DIA.	.465-.475

2 7/8-13 TOOTH SPLINE
TORQUE LIMIT 184 FT. / LBS.

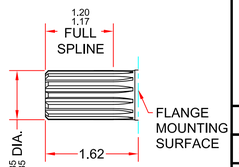

SPLINE DATA
FLAT ROOT SIDE FIT

DIAMETRAL PITCH	16/32
PRESSURE ANGLE	30°
NO. OF TEETH	13
MINOR DIA.	.722-.733

5 7/8" STRAIGHT
TORQUE LIMIT 184 FT. / LBS.

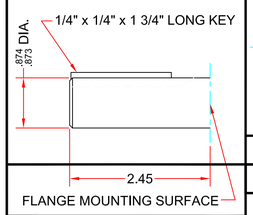

6 3/4" STRAIGHT
TORQUE LIMIT 105 FT. / LBS.
AVAILABLE FOR 45 THRU 115 SIZES ONLY

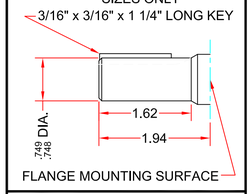

REAR ADAPTERS AVAILABLE

A-A SAE 'A-A' REAR ADAPTER PLATE

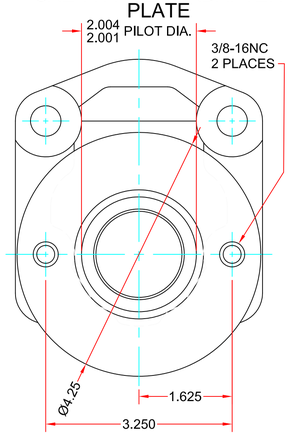

A SAE 'A' REAR ADAPTER PLATE
AVAILABLE FOR ALL UNITS

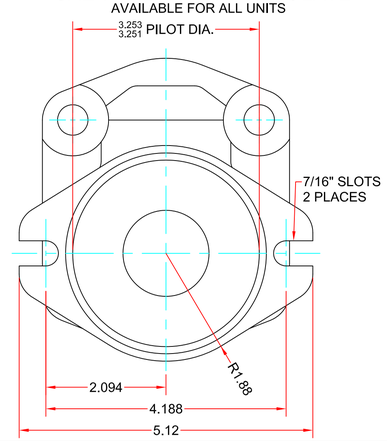

MOUNTING FLANGES AVAILABLE

A SAE 2-BOLT 'A' FLANGE
AVAILABLE FOR ALL UNITS

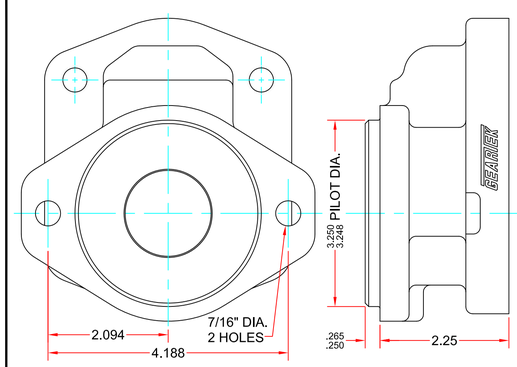

B SAE 2 & 4 BOLT 'B' FLANGE
AVAILABLE FOR ALL UNITS

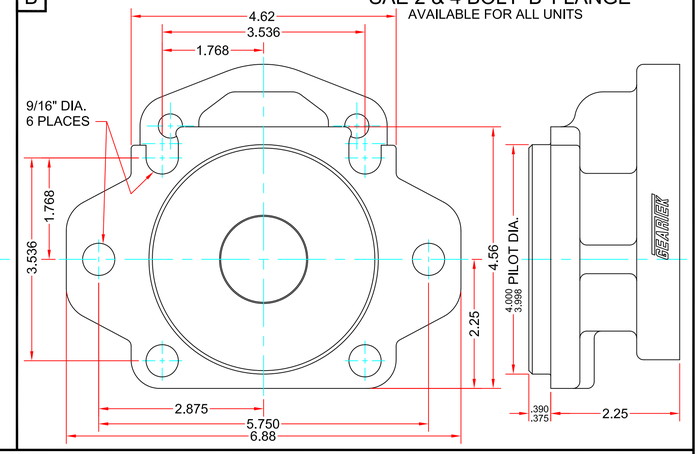

COUPLINGS AVAILABLE

58 5/8 SPLINE INTERNAL

DIAMETRAL PITCH	16/32
PRESSURE ANGLE	30°
NO. OF TEETH	9
MINOR DIA.	.500-.510
MAJOR DIA.	.680-.690
SPACE WIDTH	.1008-.1035

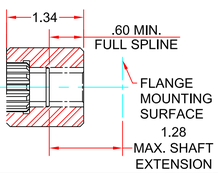

78 7/8 SPLINE INTERNAL

DIAMETRAL PITCH	16/32
PRESSURE ANGLE	30°
NO. OF TEETH	13
MINOR DIA.	.754-.759
MAJOR DIA.	.901-.906
SPACE WIDTH	.1008-.1035

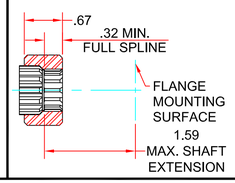

PORTS AVAILABLE

3 SIDE PORTED SAE 4-BOLT CONNECTOR

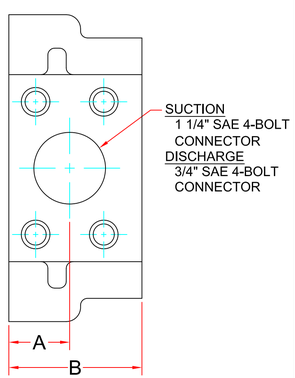

5 SIDE PORTED STRAIGHT THREAD

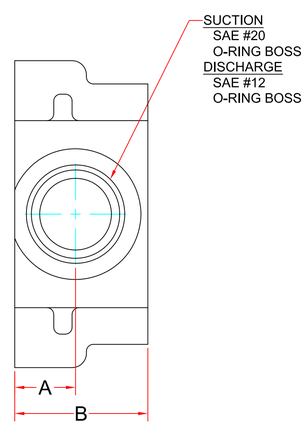

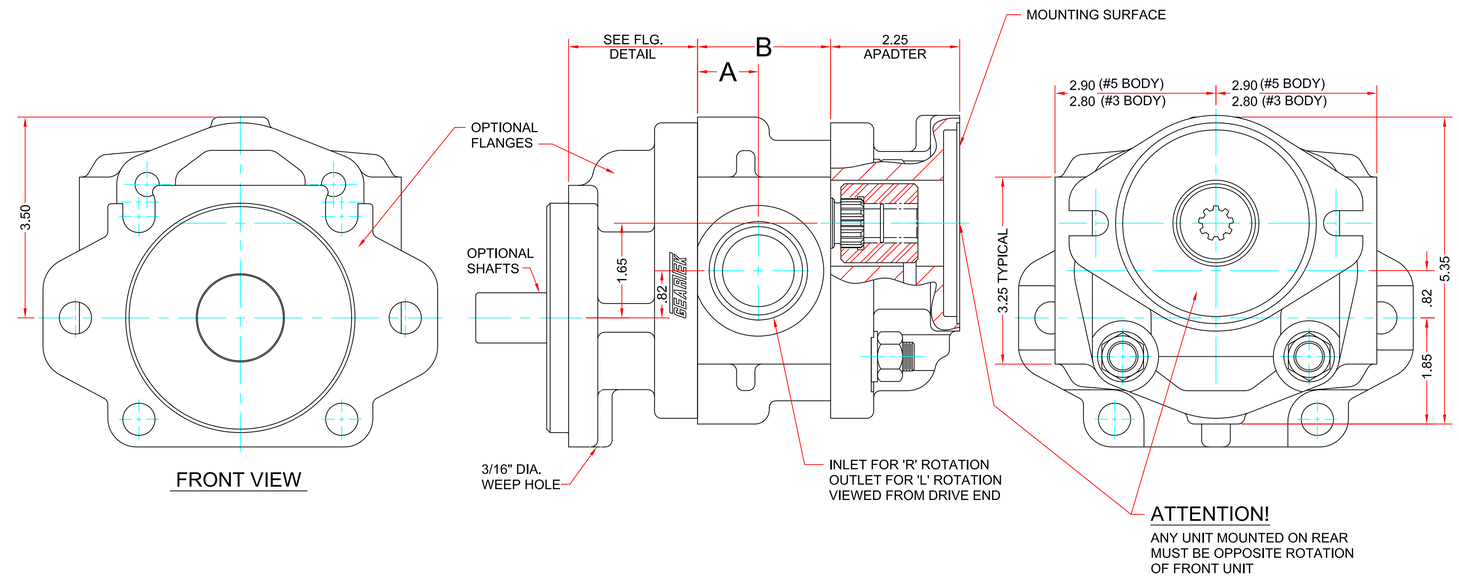

ATTENTION!
ANY UNIT MOUNTED ON REAR MUST BE OPPOSITE ROTATION OF FRONT UNIT

ALL VIEWS DRAWN FOR 'R' ROTATION

MOUNTING DIMENSIONS				SPECIFICATIONS						
SIZE	A	B	-	SIZE	U.S. GALLONS	CUBIC INCHES	LITERS	MAX. RPM	MAX. PRESSURE PSI	MAX. PRESSURE BAR
CB45	1.06	2.32	-	CB45	.0038	0.88	.0144	3600	3500	241
CB65	1.06	2.54	-	CB65	.0055	1.27	.0208	3600	3500	241
CB85	1.06	2.75	-	CB85	.0072	1.66	.0273	3400	3500	241
CB100	1.06	2.91	-	CB100	.0085	1.96	.0321	3300	3500	241
CB115	1.25	3.07	-	CB115	.0097	2.24	.0367	3100	3000	207
CB150	1.25	3.44	-	CB150	.0127	2.93	.0481	2800	2500	172
CB180	1.25	3.76	-	CB180	.0152	3.51	.0575	2500	2500*	172
CB200	1.25	3.98	-	CB200	.0169	3.90	.0639	2200	2500*	172

* CONSULT FACTORY FOR APPLICATION APPROVAL
PRESSURES MAY BE LIMITED TO SHAFT TYPE
FOR METRIC DIMENSIONS MULTIPLY 25.4 x IN. = mm

MODEL EXAMPLE

CB 150 R - 2 B 5 - A 58 - _____

- SERIES: CB
- SIZE: 150
- ROTATION: R=CLOCKWISE, L=COUNTERCLOCKWISE
- SHAFT: 2
- FLANGE: B
- PORTS (OTHER PORT TYPES AVAILABLE CONSULT FACTORY): 5
- REAR ADAPTER: A
- COUPLING: 58
- SPECIFY REAR PUMP AS REQUIRED NOTE: ROTATION OF REAR PUMP MUST BE OPPOSITE OF FRONT PUMP

REV.	BY	CHANGE DESCRIPTION	DATE
4	.	.	.
3	.	.	.
2	.	.	.
1	MLM	ADDED SAE 'A-A' REAR ADAPTER	10/23/2019

SCALE: .
DWN. BY: MLM
DATE: 01/03/2007
CKD. BY: .
DATE: .

UNLESS OTHERWISE SPECIFIED:
TWO-PLACE DECIMALS .XX = ±.030
THREE-PLACE DECIMALS .XXX = ±.010
ANGLES = ±1/2°
RADII .12

Hydraulic Analysis, Inc. retains full proprietary rights to Information on this document and reproduction or use thereof is unauthorized without written permission from Hydraulic Analysis, Inc.
Copyright 2019, Hydraulic Analysis, Inc.

GEARTEK © FLUID POWER PUMPS AND MOTORS
DIVISION OF HYDRAULIC ANALYSIS, INC.

TITLE: MOUNTING DIMENSIONS CB SERIES (COMPOSITE)
MATERIAL: .
DWG. NO.: 723419-1

DWG. NO.: **721890-5**

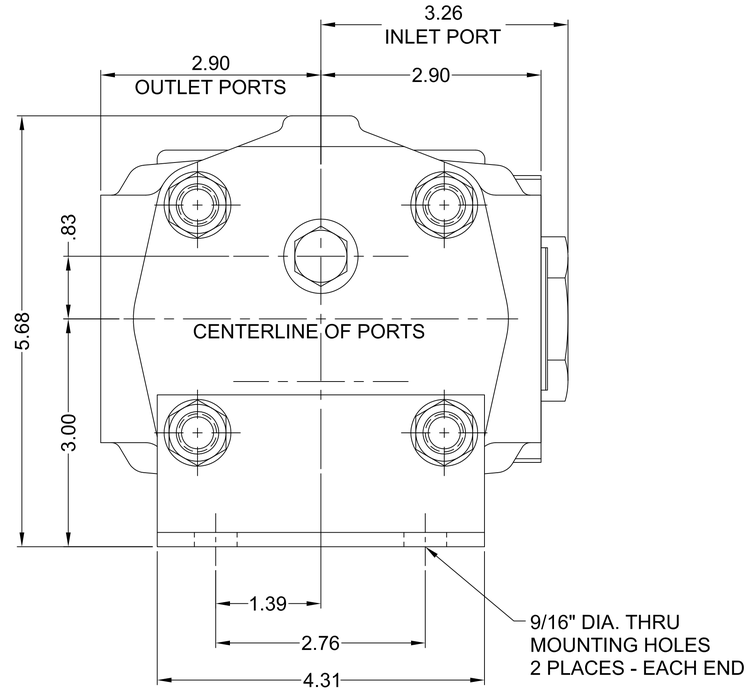

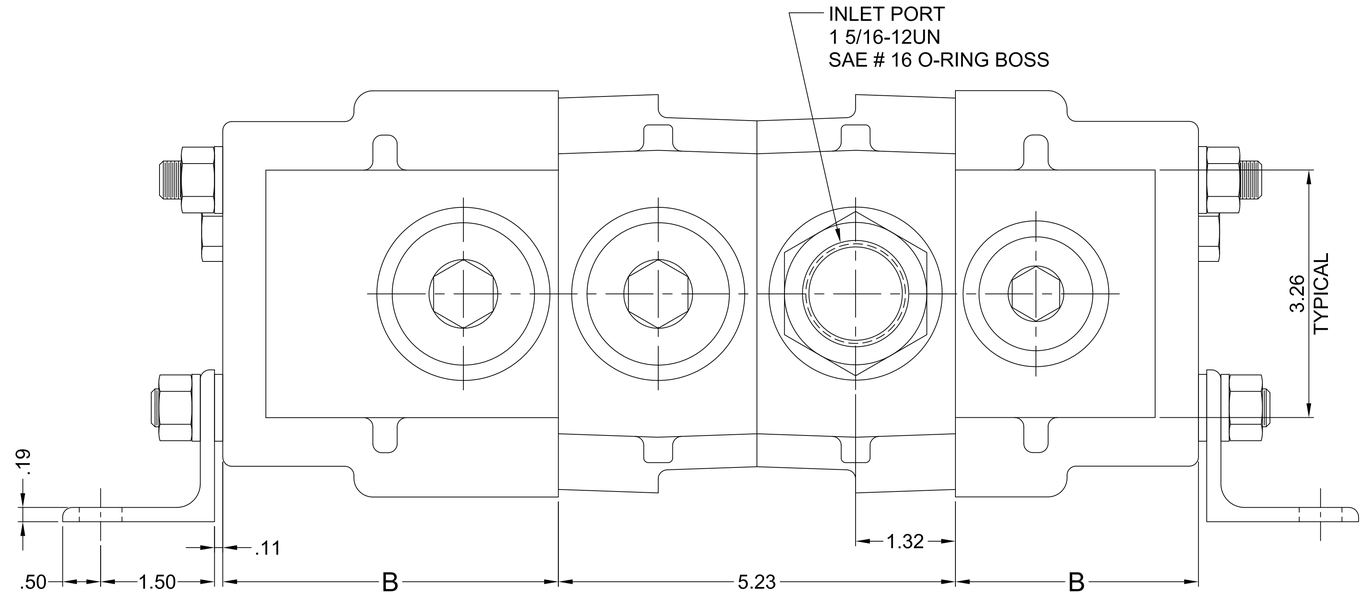

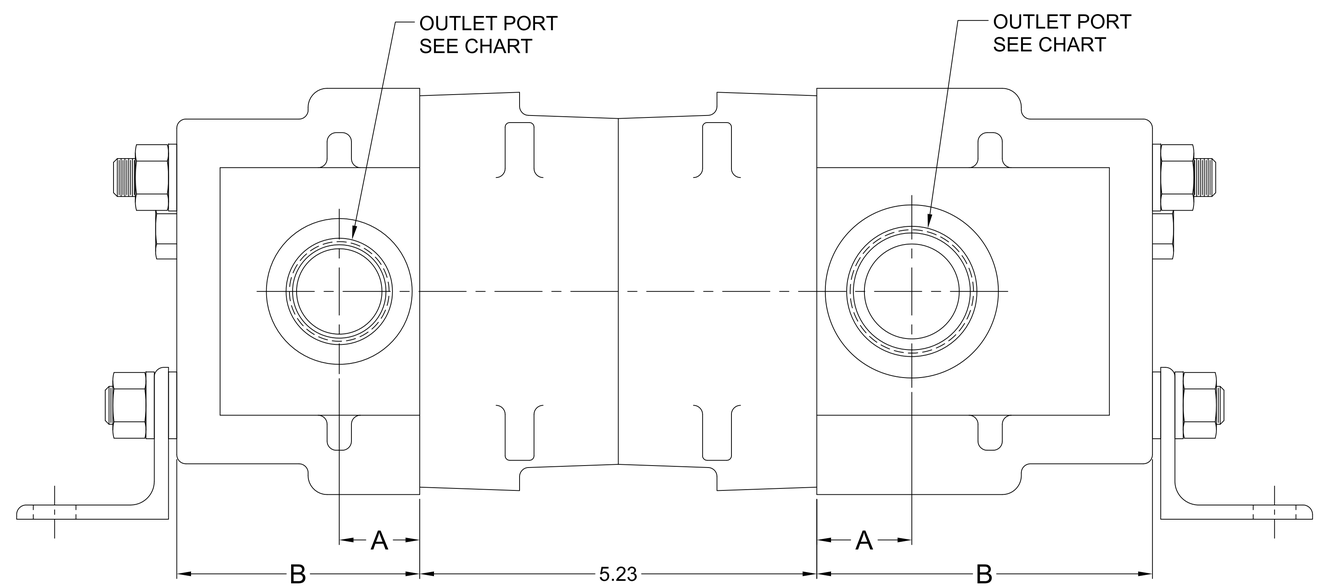

* CONSULT FACTORY WITH TYPE APPLICATION

MOUNTING DIMENSIONS					SPECIFICATIONS							
SIZE	A	B	OUTLET SAE O-RING BOSS PORT		SIZE	U.S. GALLONS	CUBIC INCHES	CUBIC CENT.	MIN. RPM	MAX. RPM	MAX. PRESSURE PSI	MAX. PRESSURE BAR
C45	1.06	2.98	#12	1 1/16-12UN	C45	0.0038	0.88	14.4	600	3600	3500	241
C65	1.06	3.20	#16	1 5/16-12UN	C65	0.0055	1.27	20.8	600	3600	3500	241
C85	1.06	3.41	#16	1 5/16-12UN	C85	0.0072	1.66	27.3	600	3400	3500	241
C100	1.06	3.57	#16	1 5/16-12UN	C100	0.0085	1.96	32.2	600	3300	3500	241
C115	1.25	3.73	#20	1 5/8-12UN	C115	0.0097	2.24	36.7	600	3100	3000	207
C150	1.25	4.10	#20	1 5/8-12UN	C150	0.0127	2.93	48.1	600	2800	2500	172
C180	1.25	4.42	#20	1 5/8-12UN	C180	0.0152	3.51	57.5	600	2500	2500 *	172
C200	1.25	4.64	#20	1 5/8-12UN	C200	0.0169	3.90	64.0	600	2200	2500 *	172

MODEL EXAMPLE

CFD 180 65

SERIES — SIZE

REV.	BY	CHANGE DESCRIPTION	DATE
13	-	-	-
12	-	-	-
11	-	-	-
10	-	-	-
9	-	-	-
8	-	-	-
7	-	-	-
6	-	-	-
5	MLM	ADDED EXTRA WASHERS TO MOUNTING BRACKETS	11/09/2009
4	MLM	CHANGED INLET PORT TO 1 5/16-12UN-2B FOR ALL	07/18/2002
3	MLM	CHANGED OUTLET PORTS TO MATCH BODIES	07/15/2002
2	MLM	CHANGED OUTLET TO 1 1/16-12UN FOR ALL	06/20/2002
1	MLM	CHANGED PORT LOCATIONS IN FRONT VIEW	11/06/2001

UNLESS OTHERWISE SPECIFIED:
TWO-PLACE DECIMALS .XX = ±.030
THREE-PLACE DECIMALS .XXX = ±.010
ANGLES = ±1/2°
RADII .12

Hydraulic Analysis, Inc. retains full proprietary rights to information on this document and reproduction or use thereof is unauthorized without written permission from Hydraulic Analysis, Inc.

NOTE: OTHER PORT TYPES AVAILABLE CONSULT FACTORY

SCALE:
INCHES 0 1 2
CENTIMETERS 0 1 2 3 4 5

SCALE: FULL
DWN. BY: DR
DATE: 03/27/1998
CKD. BY: -
DATE: -

GEARTEK® FLUID POWER PUMPS AND MOTORS
DIVISION OF HYDRAULIC ANALYSIS, INC.

TITLE: MOUNTING DIMENSIONS 'CFD' SERIES

MATERIAL: - -

DWG. NO.: **721890-5**

Copyright 2009, Hydraulic Analysis, Inc.

DWG. NO.: **723843**

1 5/8-9 TOOTH SPLINE

TORQUE LIMIT 52 FT. / LBS.
AVAILABLE FOR 45 THRU 100 SIZES ONLY

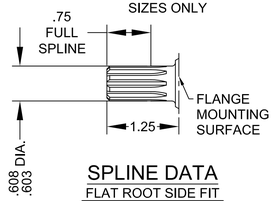

SPLINE DATA

FLAT ROOT SIDE FIT

DIAMETRAL PITCH	16/32
PRESSURE ANGLE	30°
NO. OF TEETH	9
MINOR DIA.	.465-.475

2 7/8-13 TOOTH SPLINE

TORQUE LIMIT 184 FT. / LBS.

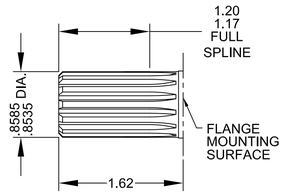

SPLINE DATA

FLAT ROOT SIDE FIT

DIAMETRAL PITCH	16/32
PRESSURE ANGLE	30°
NO. OF TEETH	13
MINOR DIA.	.722-.733

5 7/8" STRAIGHT

TORQUE LIMIT 184 FT. / LBS.

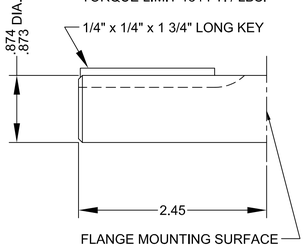

6 3/4" STRAIGHT

TORQUE LIMIT 105 FT. / LBS.
AVAILABLE FOR 45 THRU 115 SIZES ONLY

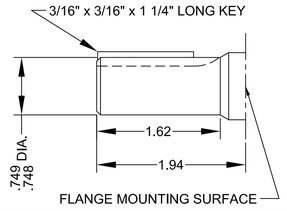

A SAE 2-BOLT 'A' FLANGE

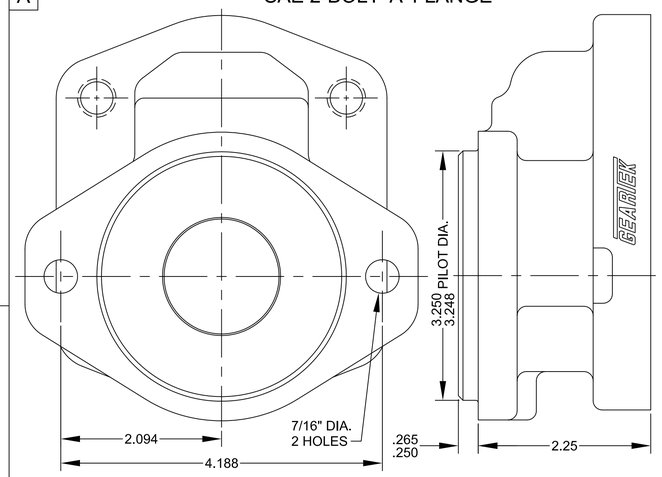

B SAE 2 & 4 BOLT 'B' FLANGE

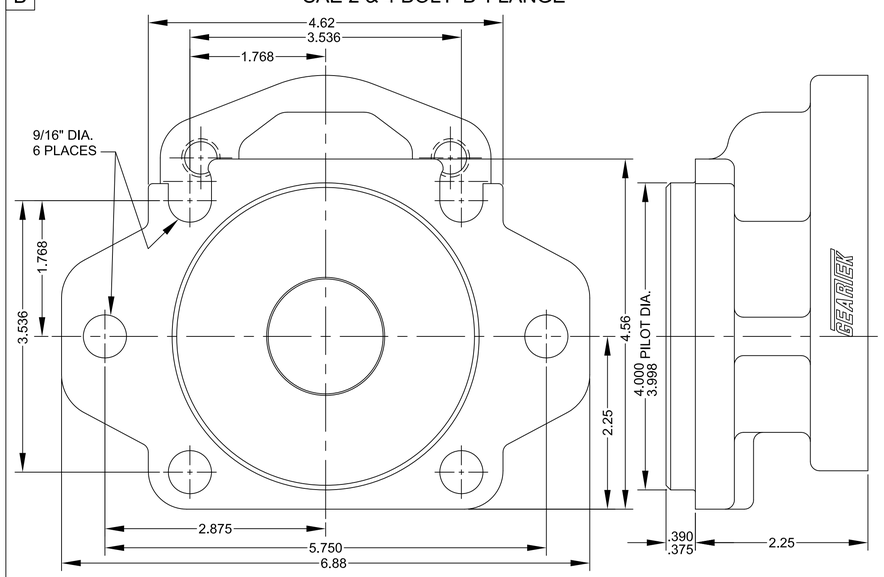

R 6-BOLT ROUND FLANGE

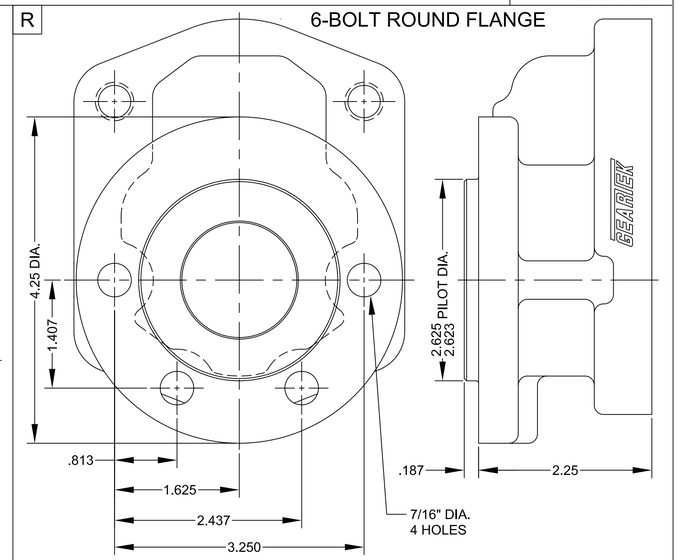

3 SIDE PORTED SAE 4-BOLT CONNECTOR

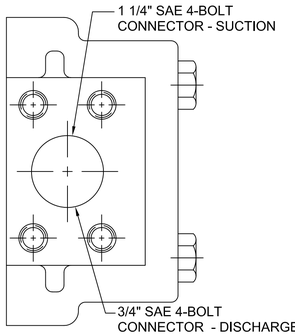

5 SIDE PORTED STRAIGHT THREAD

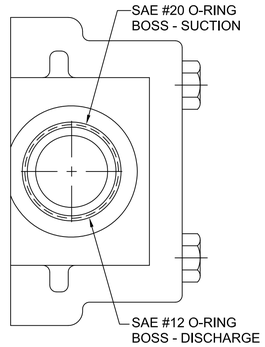

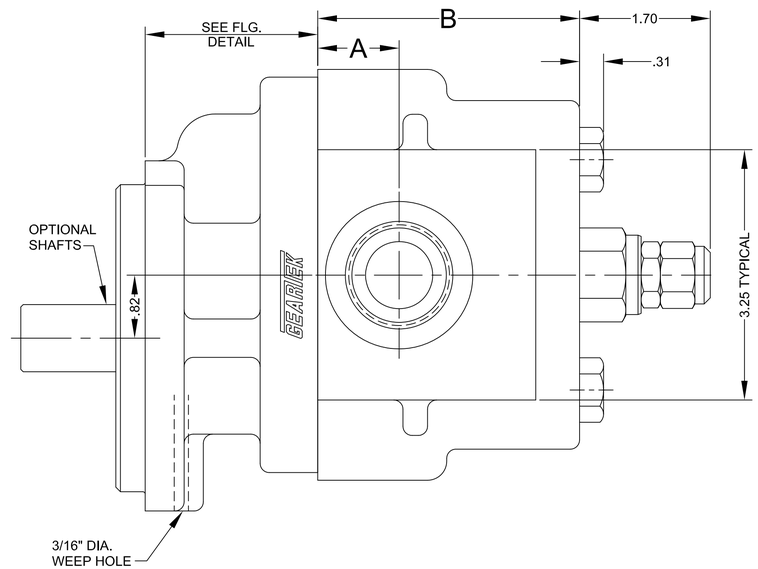

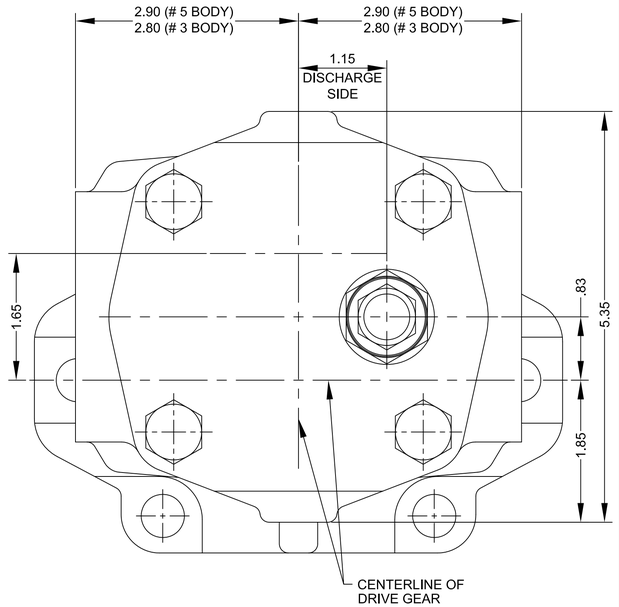

* CONSULT FACTORY WITH TYPE APPLICATION
** RELIEF VALVE RATED @ 3000 PSI
*** RELIEF VALVE RATED TO 20 GPM
**** .88 DISCHARGE PORT CENTERLINE FOR CX45 SIZE ONLY
ALL OTHER DISCHARGE CENTERLINES - SAME AS SUCTION

MOUNTING DIMENSIONS			SPECIFICATIONS							
SIZE	A	B	SIZE	U.S. GALLONS	CUBIC INCHES	CUBIC CENT.	MIN. RPM	MAX. RPM	MAX. PRESSURE PSI	MAX. PRESSURE BAR
CX45	1.06 ****	2.98	CX45	.0038	0.88	14.4	600	3600	3000 **	241
CX65	1.06	3.20	CX65	.0055	1.27	20.8	600	3600	3000 **	241
CX85	1.06	3.41	CX85	.0072	1.66	27.2	600	3400 ***	3000 **	241
CX100	1.06	3.57	CX100	.0085	1.96	32.1	600	3300 ***	3000 **	241
CX115	1.25	3.73	CX115	.0097	2.24	36.7	600	3100 ***	3000	207
CX150	1.25	4.10	CX150	.0127	2.93	48.1	600	2800 ***	2500	172
CX180	1.25	4.42	CX180	.0152	3.51	57.5	600	2500 ***	2500 *	172 *
CX200	1.25	4.64	CX200	.0169	3.90	63.9	600	2200 ***	2500 *	172 *

MODEL EXAMPLE

C X 45 - 2 B - 5 - 30

- SERIES
- w/ CROSS-OVER RELIEF VALVE
- SIZE
- SHAFT
- FLANGE
- PORTS (OTHER PORT TYPES AVAILABLE CONSULT FACTORY)
- PRESSURE SETTING
  RELIEF VALVE RATED 100 PSI THRU 3000 PSI
  CODE EXAMPLES:
  01 = 100 PSI
  30 = 3000 PSI

REV.	BY	CHANGE DESCRIPTION	DATE
4	-	-	-
3	-	-	-
2	-	-	-
1	-	-	-

UNLESS OTHERWISE SPECIFIED:
TWO-PLACE DECIMALS .XX = ±.030
THREE-PLACE DECIMALS .XXX = ±.010
ANGLES = ±5°
RADII .12

Hydraulic Analysis, Inc. retains full proprietary rights to information on this document and reproduction or use thereof is unauthorized without written permission from Hydraulic Analysis, Inc.

SCALE: INCHES 0 1 2 / CENTIMETERS 0 1 2 3 4 5

SCALE: -
DWN. BY: MLM
DATE: 12/23/2008
CKD. BY: -
DATE: -

GEARIEX® FLUID POWER PUMPS AND MOTORS
DIVISION OF HYDRAULIC ANALYSIS, INC.

TITLE: MOUNTING DIMENSIONS CX SERIES PUMPS
MATERIAL: - -
DWG. NO.: 723843

Copyright 2008, Hydraulic Analysis, Inc.

DWG. NO.: **723811**

1 5/8-9 TOOTH SPLINE

TORQUE LIMIT 52 FT. / LBS.
AVAILABLE FOR 45 THRU 100 SIZES ONLY

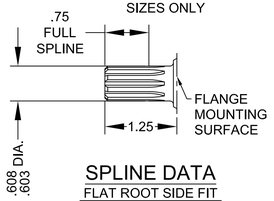

SPLINE DATA

FLAT ROOT SIDE FIT

DIAMETRAL PITCH	16/32
PRESSURE ANGLE	30°
NO. OF TEETH	9
MINOR DIA.	.465-.475

2 7/8-13 TOOTH SPLINE

TORQUE LIMIT 184 FT. / LBS.

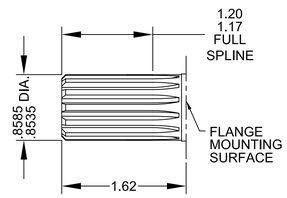

SPLINE DATA

FLAT ROOT SIDE FIT

DIAMETRAL PITCH	16/32
PRESSURE ANGLE	30°
NO. OF TEETH	13
MINOR DIA.	.722-.733

5 7/8" STRAIGHT

TORQUE LIMIT 184 FT. / LBS.

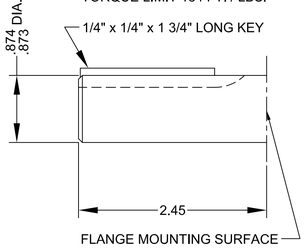

6 3/4" STRAIGHT

TORQUE LIMIT 105 FT. / LBS.
AVAILABLE FOR 45 THRU 115 SIZES ONLY

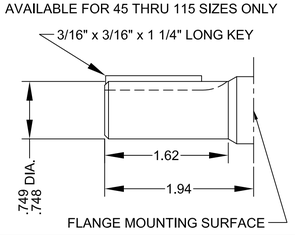

A SAE 2-BOLT 'A' FLANGE

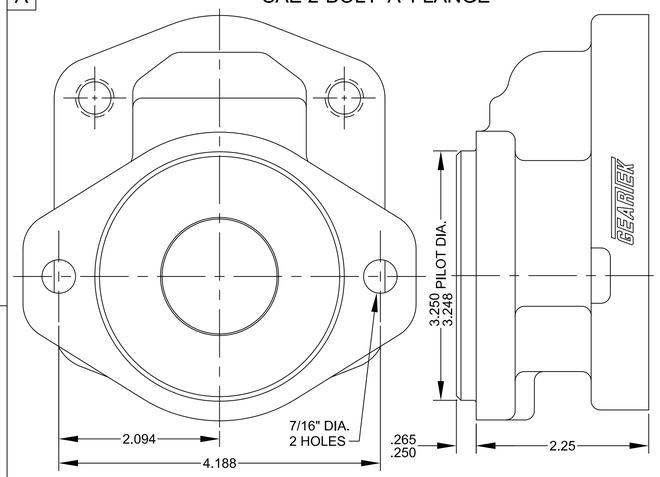

B SAE 2 & 4 BOLT 'B' FLANGE

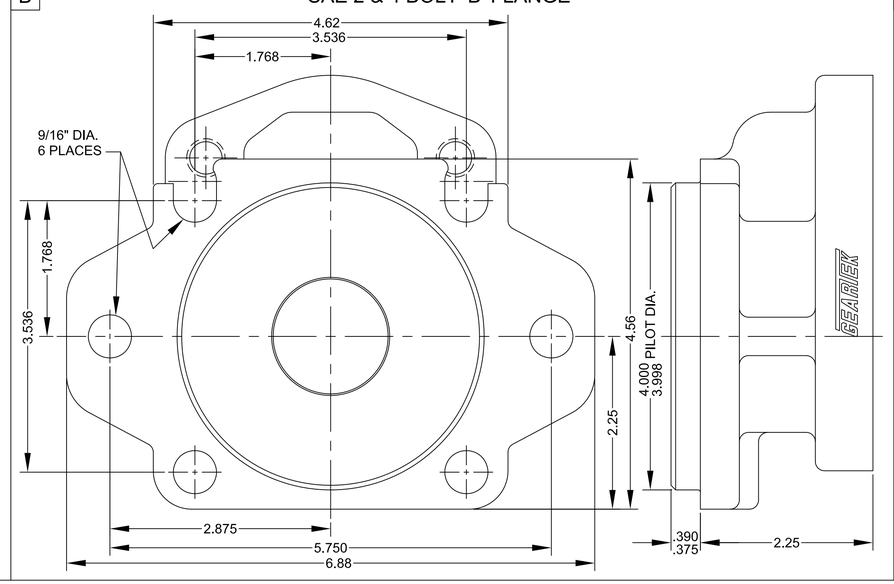

R 6-BOLT ROUND FLANGE

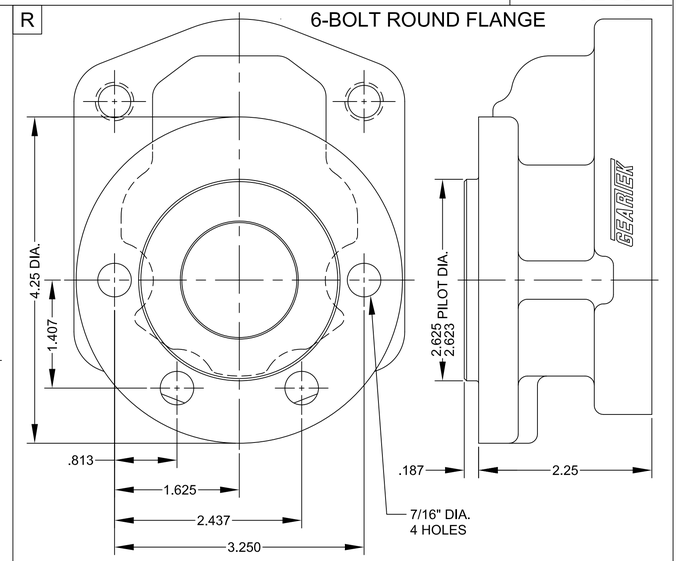

5 SIDE PORTED STRAIGHT THREAD

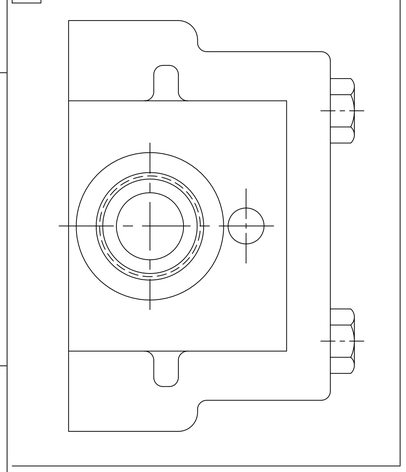

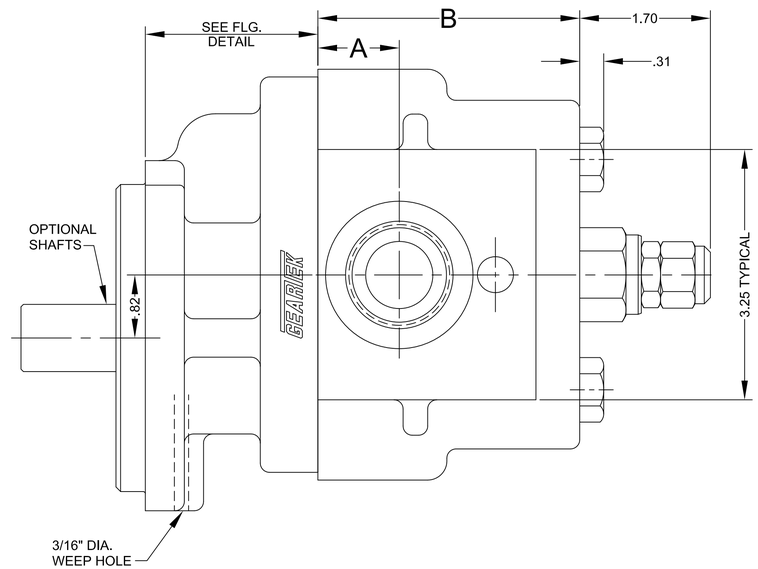

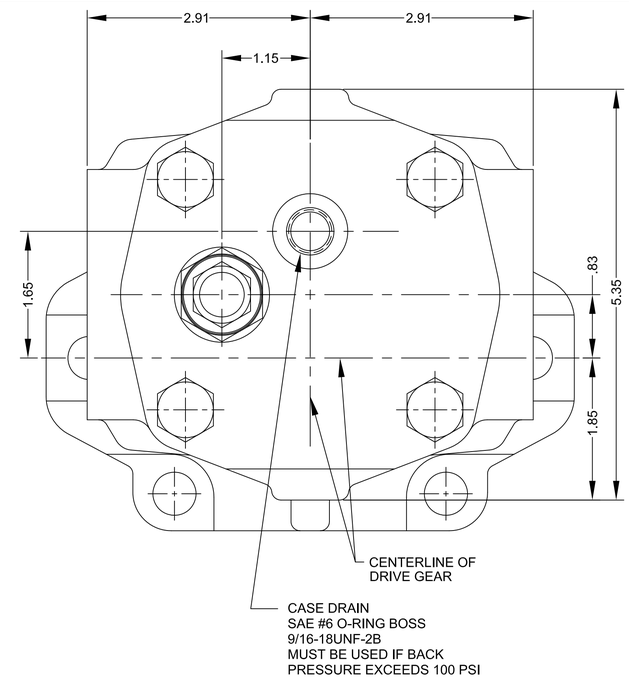

* CONSULT FACTORY WITH TYPE APPLICATION
** RELIEF VALVE RATED @ 3000 PSI
*** RELIEF VALVE RATED TO 20 GPM

MOUNTING DIMENSIONS				SPECIFICATIONS								MOTORS		
SIZE	A	B	SAE PORT SIZES STRAIGHT THREAD O-RING BOSS	SIZE	U.S. GALLONS	CUBIC INCHES	CUBIC CENT.	MIN. RPM	MAX. RPM	MAX. PRESSURE PSI	MAX. PRESSURE BAR	HP / OUT @ 2400 RPM 2500 PSI	IN /LB TORQUE @ 2400 RPM 2500 PSI START	IN /LB TORQUE @ 2400 RPM 2500 PSI RUN
MCX45	.88	2.98	#12 - 1 1/16-12UN-2B	MCX45	.0038	0.88	14.4	600	3600	3000 **	241	11	241	301
MCX65	1.06	3.20	#16 - 1 5/16-12UN-2B	MCX65	.0055	1.27	20.8	600	3600	3000 **	241	16	347	434
MCX85	1.06	3.41	#16 - 1 5/16-12UN-2B	MCX85	.0072	1.66	27.2	600	3400 ***	3000 **	241	22	455	569
MCX100	1.06	3.57	#16 - 1 5/16-12UN-2B	MCX100	.0085	1.96	32.1	600	3300 ***	3000 **	241	25	535	669
MCX115	1.25	3.73	#20 - 1 5/8-12N-2B	MCX115	.0097	2.24	36.7	600	3100 ***	3000	207	29	615	769
MCX150	1.25	4.10	#20 - 1 5/8-12N-2B	MCX150	.0127	2.93	48.1	600	2800 ***	2500	172	38	802	1003
MCX180	1.25	4.42	#20 - 1 5/8-12N-2B	MCX180	.0152	3.51	57.5	600	2500 ***	2500 *	172 *	46	962	1203
MCX200	1.25	4.64	#20 - 1 5/8-12N-2B	MCX200	.0169	3.90	63.9	600	2200 ***	2500 *	172 *	51	1069	1337

MODEL EXAMPLE

M C X 45 - 2 B - 5 - 30

- M C — MOTOR SERIES
- X — w/ CROSS-OVER RELIEF VALVE
- 45 — SIZE
- 2 — SHAFT
- B — FLANGE
- 5 — PORTS (OTHER PORT TYPES AVAILABLE CONSULT FACTORY)
- 30 — PRESSURE SETTING
  - RELIEF VALVE RATED 100 PSI THRU 3000 PSI
  - CODE EXAMPLES:
    - 01 = 100 PSI
    - 30 = 3000 PSI

REV.	BY	CHANGE DESCRIPTION	DATE
4	-	-	-
3	-	-	-
2	-	-	-
1	-	-	-

SCALE: -
DWN. BY: MLM
DATE: 11/18/2008
CKD. BY: -
DATE: -

UNLESS OTHERWISE SPECIFIED:
TWO-PLACE DECIMALS .XX = ±.030
THREE-PLACE DECIMALS .XXX = ±.010
ANGLES = ±5°
RADII .12

Hydraulic Analysis, Inc. retains full proprietary rights to information on this document and reproduction or use thereof is unauthorized without written permission from Hydraulic Analysis, Inc.

SCALE:
INCHES 0 1 2
CENTIMETERS 0 1 2 3 4 5

GEARTEK® FLUID POWER PUMPS AND MOTORS
DIVISION OF HYDRAULIC ANALYSIS, INC.

TITLE: MOUNTING DIMENSIONS MCX SERIES MOTORS
MATERIAL: - -
DWG. NO.: 723811

Copyright 2008, Hydraulic Analysis, Inc.

DWG. NO.: **721711-4**

1 — 5/8-9 TOOTH SPLINE

TORQUE LIMIT 52 FT. / LBS.
AVAILABLE FOR 45 THRU 100 SIZES ONLY

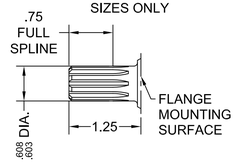

SPLINE DATA

FLAT ROOT SIDE FIT

DIAMETRAL PITCH	16/32
PRESSURE ANGLE	30°
NO. OF TEETH	9
MINOR DIA.	.465-.475

2 — 7/8-13 TOOTH SPLINE

TORQUE LIMIT 184 FT. / LBS.

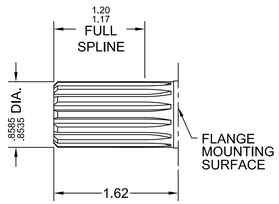

SPLINE DATA

FLAT ROOT SIDE FIT

DIAMETRAL PITCH	16/32
PRESSURE ANGLE	30°
NO. OF TEETH	13
MINOR DIA.	.722-.733

5 — 7/8" STRAIGHT

TORQUE LIMIT 184 FT. / LBS.

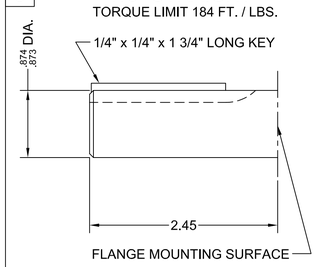

6 — 3/4" STRAIGHT

TORQUE LIMIT 105 FT. / LBS.
AVAILABLE FOR 45 THRU 115 SIZES ONLY

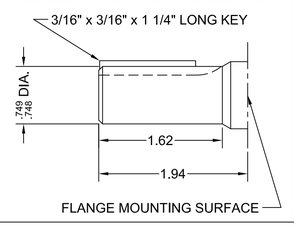

A — SAE 2-BOLT 'A' FLANGE

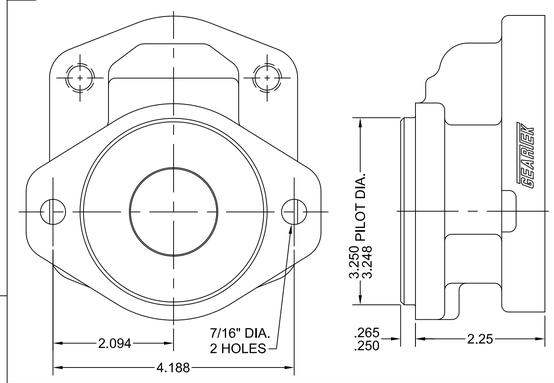

R — 6-BOLT ROUND FLANGE

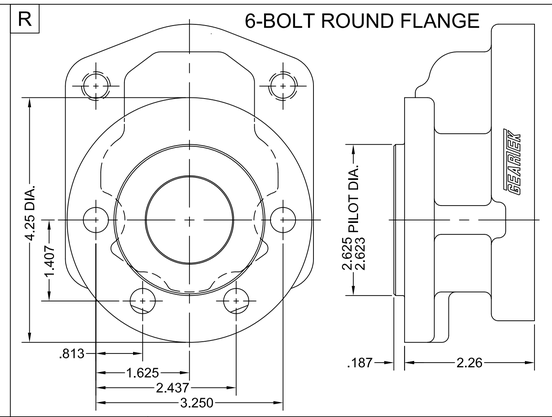

1 — REAR PORTED STRAIGHT THREAD

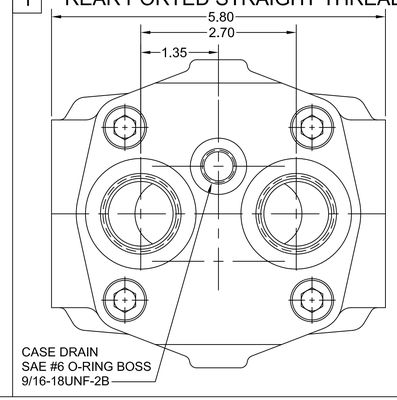

3 — SIDE PORTED SAE 4-BOLT CONNECTOR

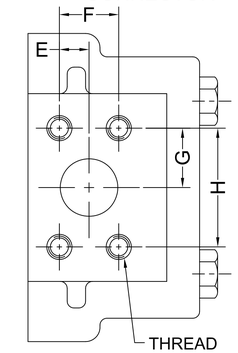

5 — SIDE PORTED STRAIGHT THREAD

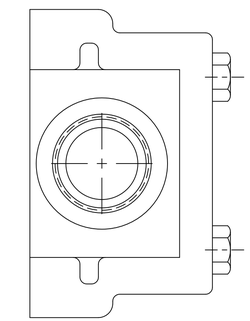

B — SAE 2 & 4 BOLT 'B' FLANGE

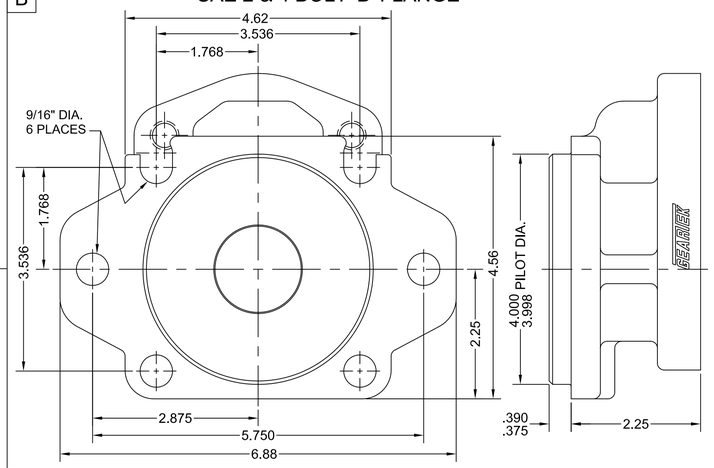

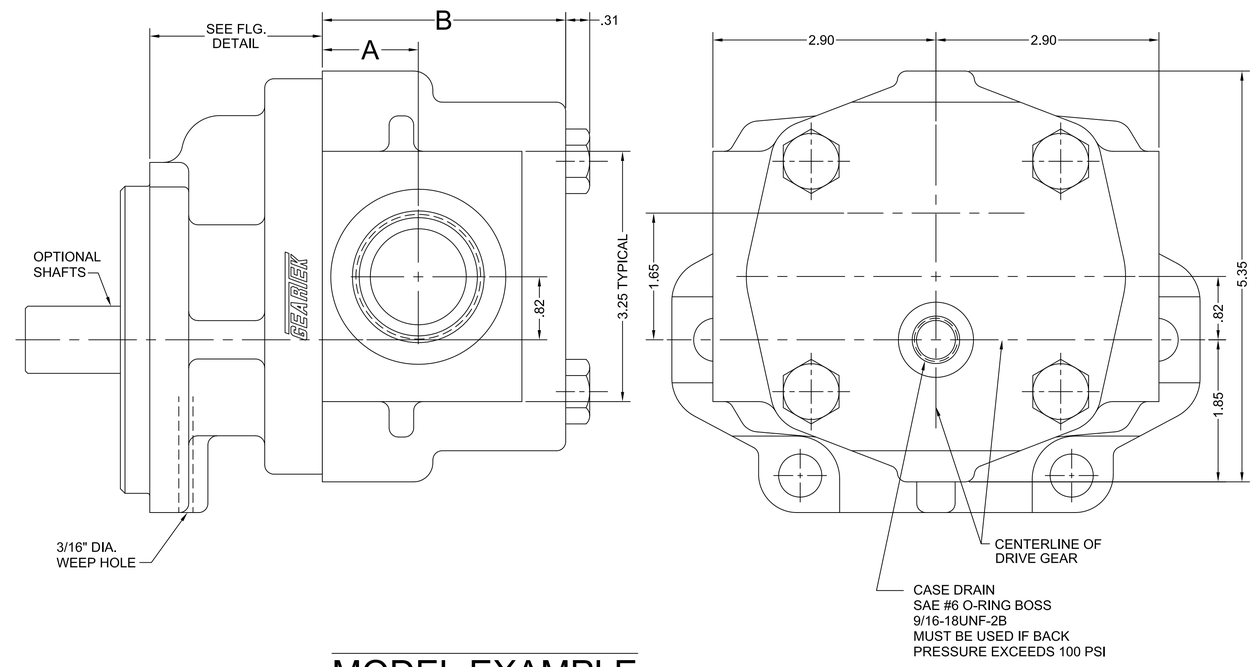

SAE 4-BOLT CONNECTOR CHART

SIZE	E	F	G	H	THREAD
3/4"	.438	.875	.938	1.875	3/8-16
1"	.516	1.031	1.031	2.062	3/8-16
1 1/4"	.594	1.188	1.157	2.313	7/16-14

MODEL EXAMPLE

RPM C 45 - 2 B - 5

- RPM — REVERSIBLE PUMP / MOTOR
- C — SERIES
- 45 — SIZE
- 2 — SHAFT
- B — FLANGE
- 5 — PORTS (OTHER PORT TYPES AVAILABLE CONSULT FACTORY)

* CONSULT FACTORY WITH TYPE APPLICATION

MOUNTING DIMENSIONS					SPECIFICATIONS							MOTORS		
SIZE	A	B	PORT SIZES: CATALOG CODES # 1 & 5 STRAIGHT THREAD	PORT SIZES: CATALOG CODE # 3 SAE 4-BOLT CONN.	SIZE	U.S. GALLONS	CUBIC INCHES	CUBIC CENT.	MIN. RPM	MAX. RPM	MAX. PRESSURE RPM	MAX. PRESSURE RPM	HP / OUT @ 2400 RPM 2500 PSI	IN /LB TORQUE @ 2400 RPM 2500 PSI: START	IN /LB TORQUE @ 2400 RPM 2500 PSI: RUN
RPMC45	1.06	2.98	#12 - 1 1/16-12UN-2B	3/4"	RPMC45	.0038	0.88	14.4	600	3600	3500	241	11	241	301
RPMC65	1.06	3.20	#16 - 1 5/16-12UN-2B	1"	RPMC65	.0055	1.27	20.8	600	3600	3500	241	16	347	434
RPMC85	1.06	3.41	#16 - 1 5/16-12UN-2B	1"	RPMC85	.0072	1.66	27.2	600	3400	3500	241	22	455	569
RPMC100	1.06	3.57	#16 - 1 5/16-12UN-2B	1"	RPMC100	.0085	1.96	32.1	600	3300	3500	241	25	535	669
RPMC115	1.25	3.73	#20 - 1 5/8-12N-2B	1 1/4"	RPMC115	.0097	2.24	36.7	600	3100	3000	207	29	615	769
RPMC150	1.25	4.10	#20 - 1 5/8-12N-2B	1 1/4"	RPMC150	.0127	2.93	48.1	600	2800	2500	172	38	802	1003
RPMC180	1.25	4.42	#20 - 1 5/8-12N-2B	1 1/4"	RPMC180	.0152	3.51	57.5	600	2500	2500 *	172 *	46	962	1203
RPMC200	1.25	4.64	#20 - 1 5/8-12N-2B	1 1/4"	RPMC200	.0169	3.90	63.9	600	2200	2500 *	172 *	51	1069	1337

REV.	BY	CHANGE DESCRIPTION	DATE
4	MLM	MOVED DRAIN TO BE OVER DRIVE	11/13/2009
3	MLM	ADDED NO. 3 PORTS	04/06/2009
2	DR	ADDED NO. 1 GEAR	05/16/2001
1	DR	ADDED 'R' FLANGE	05/17/1999

SCALE: NONE
DWN. BY: DR
DATE: 08/22/1997
CKD. BY: -
DATE: -

UNLESS OTHERWISE SPECIFIED:
TWO-PLACE DECIMALS .XX = ±.030
THREE-PLACE DECIMALS .XXX = ±.010
ANGLES = ±5°
RADII .12

Hydraulic Analysis, Inc. retains full proprietary rights to information on this document and reproduction or use thereof is unauthorized without written permission from Hydraulic Analysis, Inc.

GEARTEK® FLUID POWER PUMPS AND MOTORS
DIVISION OF HYDRAULIC ANALYSIS, INC.

TITLE: MOUNTING DIMENSIONS
RPMC REVERSIBLE PUMPS / MOTORS

MATERIAL: - -

DWG. NO.: **721711-4**

Copyright 2005, Hydraulic Analysis, Inc.

DWG. NO.: 722765-1

2 7/8-13 TOOTH SPLINE

TORQUE LIMIT 184 FT. / LBS.

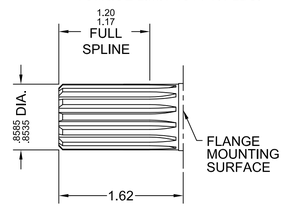

SPLINE DATA

FLAT ROOT SIDE FIT

DIAMETRAL PITCH	16/32
PRESSURE ANGLE	30°
NO. OF TEETH	
MINOR DIA.	.722-.733

5 7/8" STRAIGHT

TORQUE LIMIT 184 FT. / LBS.

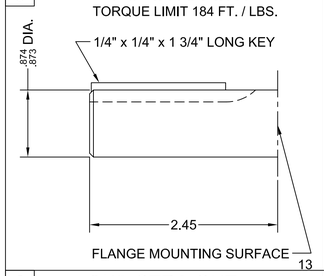

6 3/4" STRAIGHT

TORQUE LIMIT 105 FT. / LBS.
AVAILABLE FOR 45 THRU 115 SIZES ONLY

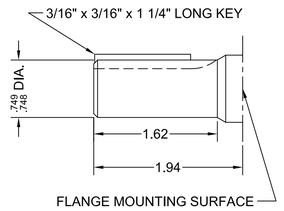

A SAE 2-BOLT 'A' FLANGE

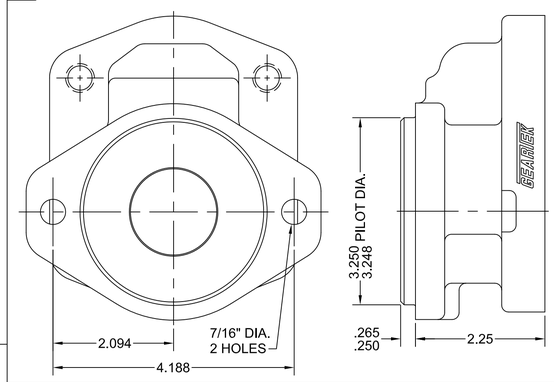

R 6-BOLT ROUND FLANGE

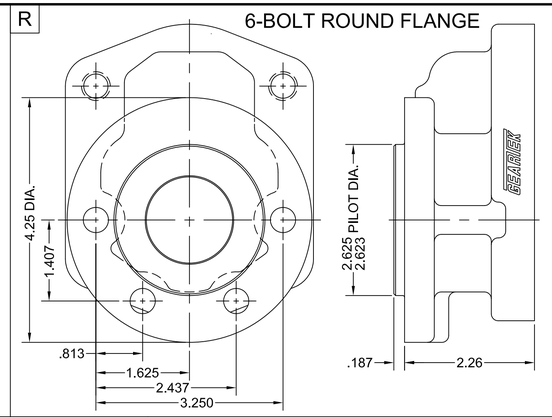

1 REAR PORTED STRAIGHT THREAD

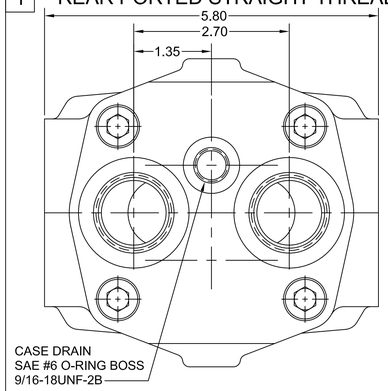

3 SIDE PORTED SAE 4-BOLT CONNECTOR

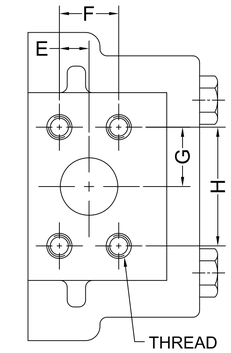

5 SIDE PORTED STRAIGHT THREAD

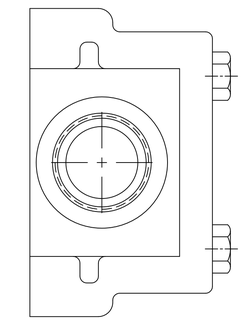

B SAE 2 & 4 BOLT 'B' FLANGE

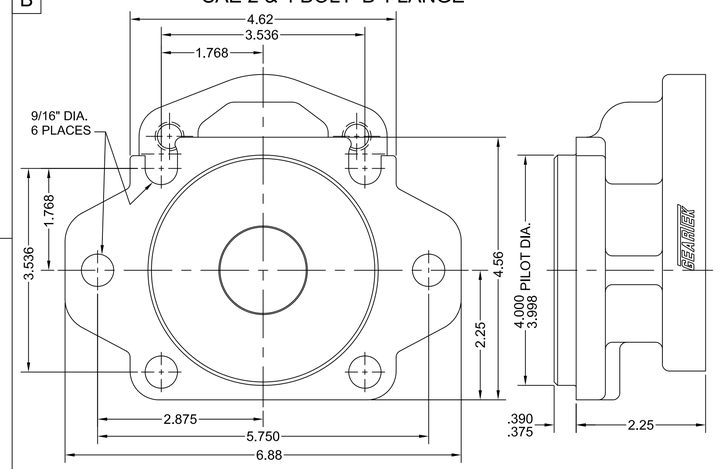

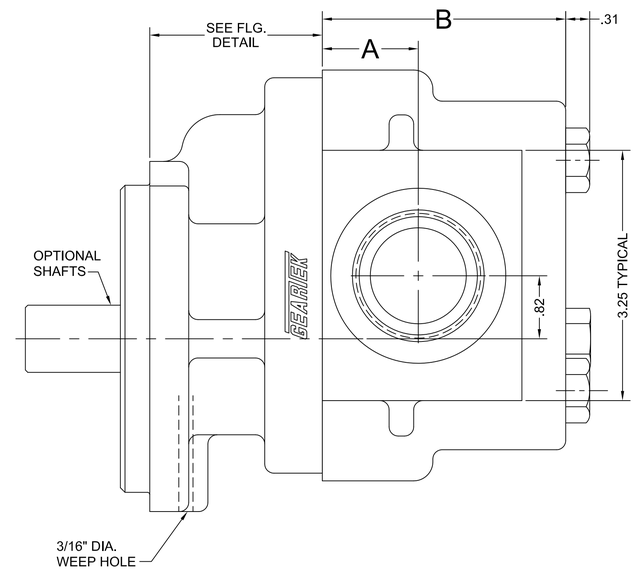

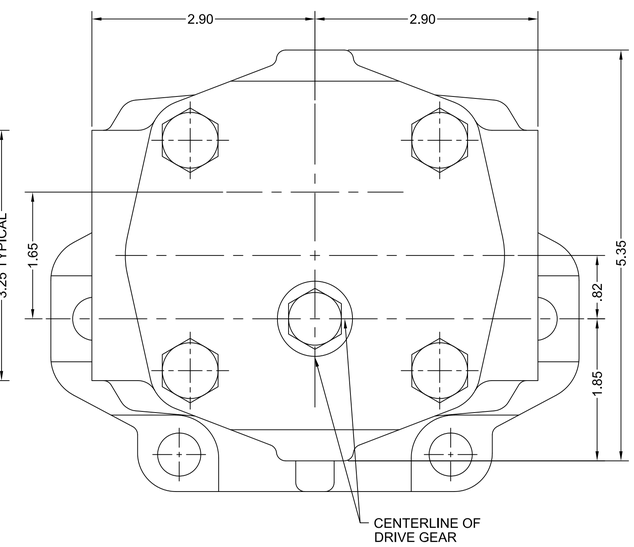

SAE 4-BOLT CONNECTOR CHART

SIZE	E	F	G	H	THREAD
3/4"	.438	.875	.938	1.875	3/8-16
1"	.516	1.031	1.031	2.062	3/8-16
1 1/4"	.594	1.188	1.157	2.313	7/16-14

* CONSULT FACTORY WITH TYPE APPLICATION

MOUNTING DIMENSIONS					SPECIFICATIONS								MOTORS		
SIZE	A	B	PORT SIZES		SIZE	U.S. GALLONS	CUBIC INCHES	CUBIC CENT.	MIN. RPM	MAX. RPM	MAX. PRESSURE		HP / OUT @ 2400 RPM 2500 PSI	IN /LB TORQUE @ 2400 RPM 2500 PSI	
			CATALOG CODES # 1 & 5 STRAIGHT THREAD	CATALOG CODE # 3 SAE 4-BOLT CONN.							RPM	RPM		START	RUN
RPMCH45	1.06	2.98	#12 - 1 1/16-12UN-2B	3/4"	RPMCH45	.0038	0.88	14.4	600	3600	3500	241	11	241	301
RPMCH65	1.06	3.20	#16 - 1 5/16-12UN-2B	1"	RPMCH65	.0055	1.27	20.8	600	3600	3500	241	16	347	434
RPMCH85	1.06	3.41	#16 - 1 5/16-12UN-2B	1"	RPMCH85	.0072	1.66	27.2	600	3400	3500	241	22	455	569
RPMCH100	1.06	3.57	#16 - 1 5/16-12UN-2B	1"	RPMCH100	.0085	1.96	32.1	600	3300	3500	241	25	535	669
RPMCH115	1.25	3.73	#20 - 1 5/8-12N-2B	1 1/4"	RPMCH115	.0097	2.24	36.7	600	3100	3000	207	29	615	769
RPMCH150	1.25	4.10	#20 - 1 5/8-12N-2B	1 1/4"	RPMCH150	.0127	2.93	48.1	600	2800	2500	172	38	802	1003
RPMCH180	1.25	4.42	#20 - 1 5/8-12N-2B	1 1/4"	RPMCH180	.0152	3.51	57.5	600	2500	2500 *	172 *	46	962	1203
RPMCH200	1.25	4.64	#20 - 1 5/8-12N-2B	1 1/4"	RPMCH200	.0169	3.90	63.9	600	2200	2500 *	172 *	51	1069	1337

MODEL EXAMPLE

RPM C H 45 - 2 B - 5

- RPM: REVERSIBLE PUMP / MOTOR
- C: SERIES
- H: HIGH PRESSURE SEAL
- 45: SIZE
- 2: SHAFT
- B: FLANGE
- 5: PORTS (OTHER PORT TYPES AVAILABLE CONSULT FACTORY)

REV.	BY	CHANGE DESCRIPTION	DATE
4	-	-	-
3	-	-	-
2	-	-	-
1	MLM	ADDED NO. 3 PORTS	04/07/2009

UNLESS OTHERWISE SPECIFIED:
TWO-PLACE DECIMALS .XX = ±.030
THREE-PLACE DECIMALS .XXX = ±.010
ANGLES = ±5°
RADII .12

Hydraulic Analysis, Inc. retains full proprietary rights to information on this document and reproduction or use thereof is unauthorized without written permission from Hydraulic Analysis, Inc.

SCALE: NONE
DWN. BY: MLM
DATE: 08/28/2003
CKD. BY: -
DATE: -

GEARTEK® FLUID POWER PUMPS AND MOTORS
DIVISION OF HYDRAULIC ANALYSIS, INC.

TITLE: MOUNTING DIMENSIONS RPMCH REVERSIBLE PUMPS / MOTORS

MATERIAL: - -

DWG. NO.: 722765-1

Copyright 2005, Hydraulic Analysis, Inc.

DWG. NO.: **721609-8**

SIZE	10 DRIVE GEARS (1) REQUIRED EACH UNIT CODE 1 5/8-11T	CODE 2 7/8-13T	CODE 5 7/8" STR.	CODE 6 3/4" STR.	11 IDLER GEARS (1) REQ'D EACH UNIT	12 BODIES CODE 1 REAR ST. THREAD O'RING BOSS	12 BODIES CODE 3 SAE 4-BOLT	12 BODIES CODE 5 SIDE ST. THREAD O'RING BOSS	BODIES BLANK PORT BODIES FOR PARTS ORDERS ONLY	13 CAPSCREWS HEX HEAD FOR NO. 3 & 5 BODIES (4) REQUIRED EACH PUMP	13 CAPSCREWS SOCKET HEAD FOR NO. 1 BODIES (4) REQUIRED EACH PUMP
						(2) BUSHINGS 722852 INCLUDED IN BODY ASS'Y.	(2) BUSHINGS 722852 INCLUDED IN BODY ASS'Y.	(2)BUSHINGS 722852 INCLUDED IN BODY ASS'Y.	(2)BUSHINGS 722852 INCLUDED IN BODY ASS'Y.		
C45	722074	721571	721590	721677	721560	721732	721610	721617	721538	73D-8-40HG8	73B-8-40HG8
C65	722079	721572	721591	721678	721561	721733	721611	721618	721601	73D-8-42HG8	73B-8-40HG8
C85	721813	721547	721592	721679	721548	721734	721612	721619	721602	73D-8-44HG8	73B-8-42HG8
C100	722075	721573	721593	721680	721562	721735	721613	721620	721603	73D-8-44HG8	73B-8-44HG8
C115	------	721574	721594	721681	721563	721736	721614	721621	721604	73D-8-46HG8	73B-8-44HG8
C150	------	721575	721595	------	721564	721737	721615	721622	721605	73D-8-50HG8	73B-8-50HG8
C180	------	721576	721596	------	721565	721738	721616	721623	721606	73D-8-54HG8	73B-8-52HG8
C200	------	721577	721597	------	721566	721739	721537	721624	721536	73D-8-54HG8	73B-8-54HG8

14 FLANGES (1) REQUIRED EACH UNIT CODE A 2 BOLT	CODE B 2 & 4 BOLT	CODE P PTO for # 2 SHAFT	CODE R 6 BOLT	KEYS (1) REQ'D EACH UNIT FOR STRAIGHT SHAFTS CODE 5	CODE 6
721578	721511	721793	721897	621079	621623
(2) BEARINGS 722852 IN FLANGE ASSEMBLY					

PARTS COMMON TO ALL UNITS

ITEM NO.	PART NO.	QTY.	DESCRIPTION
15	721569	1	PRESSURE PLATE (TOP)
16	721570	1	PRESSURE PLATE (BOTTOM)
17	721682	4	SEALING STRIP
18	66-153-N552-90	1	'O' RING
19	69-5000-150	1	SNAP RING
20	625992	2	SEAL
21	720932	1	PLUG
22	627110	2	DOWELS
24	626698	1	PLUG
25	721691	8	BACK UP RING

SERVICE ONLY

	721626	1	SOFT GOODS KIT
	721627	1	SUB-ASSY.

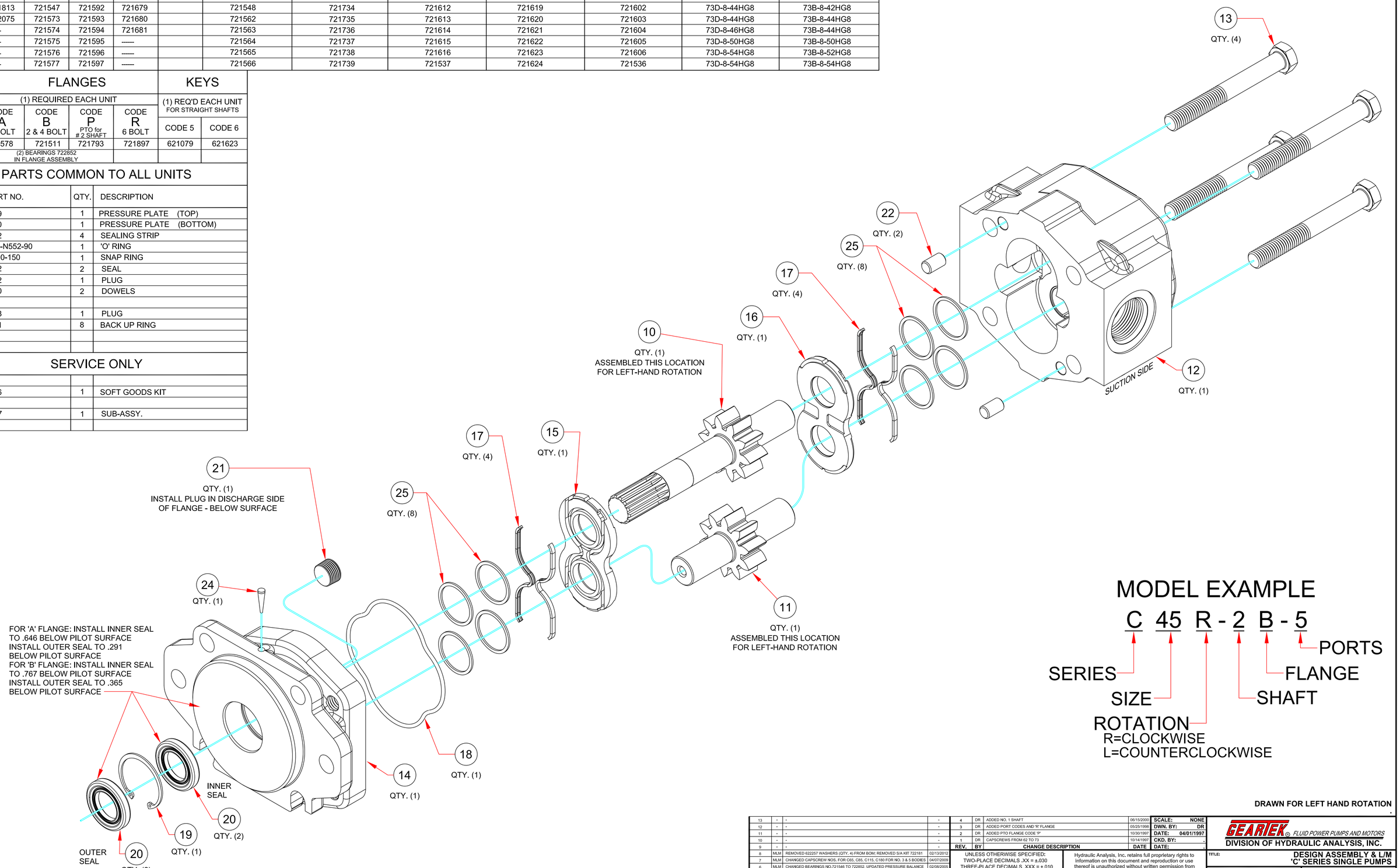

MODEL EXAMPLE

C 45 R - 2 B - 5

- SERIES
- SIZE
- ROTATION: R=CLOCKWISE, L=COUNTERCLOCKWISE
- SHAFT
- FLANGE
- PORTS

DRAWN FOR LEFT HAND ROTATION

REV.	BY	CHANGE DESCRIPTION	DATE
13	-	-	-
12	-	-	-
11	-	-	-
10	-	-	-
9	-	-	-
8	MLM	REMOVED 622257 WASHERS (QTY. 4) FROM BOM; REMOVED S/A KIT 722181	02/13/2012
7	MLM	CHANGED CAPSCREW NOS. FOR C65, C85, C115, C180 FOR NO. 3 & 5 BODIES	04/07/2009
6	MLM	CHANGED BEARINGS NO.721546 TO 722852, UPDATED PRESSURE BALANCE	02/08/2005
5	DR	CAPSCREWS FOR NO. 1 BODIES TO SOCKET HEADS	07/11/2000
4	DR	ADDED NO. 1 SHAFT	06/15/2000
3	DR	ADDED PORT CODES AND 'R' FLANGE	05/25/1998
2	DR	ADDED PTO FLANGE CODE 'P'	10/30/1997
1	DR	CAPSCREWS FROM 62 TO 73	10/14/1997

SCALE: NONE
DWN. BY: DR
DATE: 04/01/1997
CKD. BY: .
DATE: .

UNLESS OTHERWISE SPECIFIED:
TWO-PLACE DECIMALS .XX = ±.030
THREE-PLACE DECIMALS .XXX = ±.010
ANGLES = ±1/2°
RADII .12

Hydraulic Analysis, Inc. retains full proprietary rights to Information on this document and reproduction or use thereof is unauthorized without written permission from Hydraulic Analysis, Inc.
Copyright 2016, Hydraulic Analysis, Inc.

GEARTEK® FLUID POWER PUMPS AND MOTORS
DIVISION OF HYDRAULIC ANALYSIS, INC.

TITLE: DESIGN ASSEMBLY & L/M 'C' SERIES SINGLE PUMPS

MATERIAL: .

DWG. NO.: **721609-8**

DWG. NO.: **721638-3**

SIZE	10 DRIVE GEARS (1) REQ'D EACH UNIT CODE 2 7/8 SPLINE	CODE 5 7/8 STR.		11 IDLER GEARS (1) REQ'D FOR REAR SECTION ONLY	12 REAR DRIVE GEARS (1) REQ'D EACH SIZE OR SECTION	13 FRONT BODY CODE 3 SAE 4-BOLT (2) BUSHINGS 722852 INCLUDED IN BODY ASS'Y.	13 FRONT BODY CODE 5 ST. THREAD O'RING BOSS (2)BUSHINGS 722852 INCLUDED IN BODY ASS'Y.	BLANK FRONT BODY FOR PARTS ORDERS ONLY (2)BUSHINGS 722852 INCLUDED IN BODY ASS'Y.	14 REAR BODY CODE 3 SAE 4-BOLT (2) BUSHINGS 722852 INCLUDED IN BODY ASS'Y.	14 REAR BODY CODE 5 ST. THREAD O'RING BOSS (2)BUSHINGS 722852 INCLUDED IN BODY ASS'Y.	BLANK REAR BODY FOR PARTS ORDERS ONLY (2)BUSHINGS 722852 INCLUDED IN BODY ASS'Y.
C45	721571	721590		721560	721581	721640	721648	721630	721658	721666	721538
C65	721572	721591		721561	721582	721641	721649	721631	721659	721667	721601
C85	721547	721592		721548	721583	721642	721650	721632	721660	721668	721602
C100	721573	721593		721562	721584	721643	721651	721633	721661	721669	721603
C115	721574	721594		721563	721585	721644	721652	721634	721662	721670	721604
C150	721575	721595		721564	721586	721645	721653	721635	721663	721671	721605
C180	721576	721596		721565	721587	721646	721654	721636	721664	721672	721606
C200	721577	721597		721566	721588	721647	721655	721637	721665	721673	721536

15 FRONT SECTION SIZE	STUDS (4) REQUIRED EACH PUMP — REAR SECTION SIZE C45	C65	C85	C100	C115	C150	C180	C200
C45	622798	624441	623976	623976	625599	622674	622562	622676
C65	624441	623976	625599	625599	625599	622674	622562	622676
C85	623976	625599	625599	625599	622674	622562	622676	622612
C100	623976	625599	622674	622674	622674	622676	622612	623592
C115	625599	622674	622674	622562	622562	622676	622612	623583
C150	622674	622562	622676	622676	622676	623592	623583	622681
C180	622562	622676	622612	622612	623592	623066	622681	622681
C200	622676	622676	622612	623592	623583	622681	622681	622641

16 FLANGES (1) REQ'D EACH UNIT	CODE A 2 BOLT	CODE B 2X4-B				KEYS (1) REQ'D EACH UNIT FOR STRAIGHT SHAFTS	
	721578	721511				CODE 5	-
	(2) 722852 BUSHINGS IN FLG. ASSY.					621079	-

PARTS COMMON TO ALL UNITS

ITEM NO.	PART NO.	QUAN.	DESCRIPTION
18	721555	1	BEARING PLATE
19	721569	2	PRESSURE PLATE (TOP)
20	721570	2	PRESSURE PLATE (BOTTOM)
21	721682	8	SEALING STRIPS
22	66-153-N552-90	3	O-RING
23	69-5000-150	1	SNAP RING
24	625992	2	SEAL
25	720932	1	PLUG
26	627110	6	DOWELS
27	622257	4	WASHER
28	626698	1	PLUG
29	60-HR8	4	NUT 1/2-20UNF HEAT TREATED
30	626394	1	COUPLING
31	69-N5000-75	1	SNAP RING
32	721691	16	BACK-UP RING
-	-	-	-
-	-	-	-
	SERVICE ONLY		
	721656	1	SOFT GOODS KIT
	721657	1	SUB-ASSEMBLY
	-	-	-

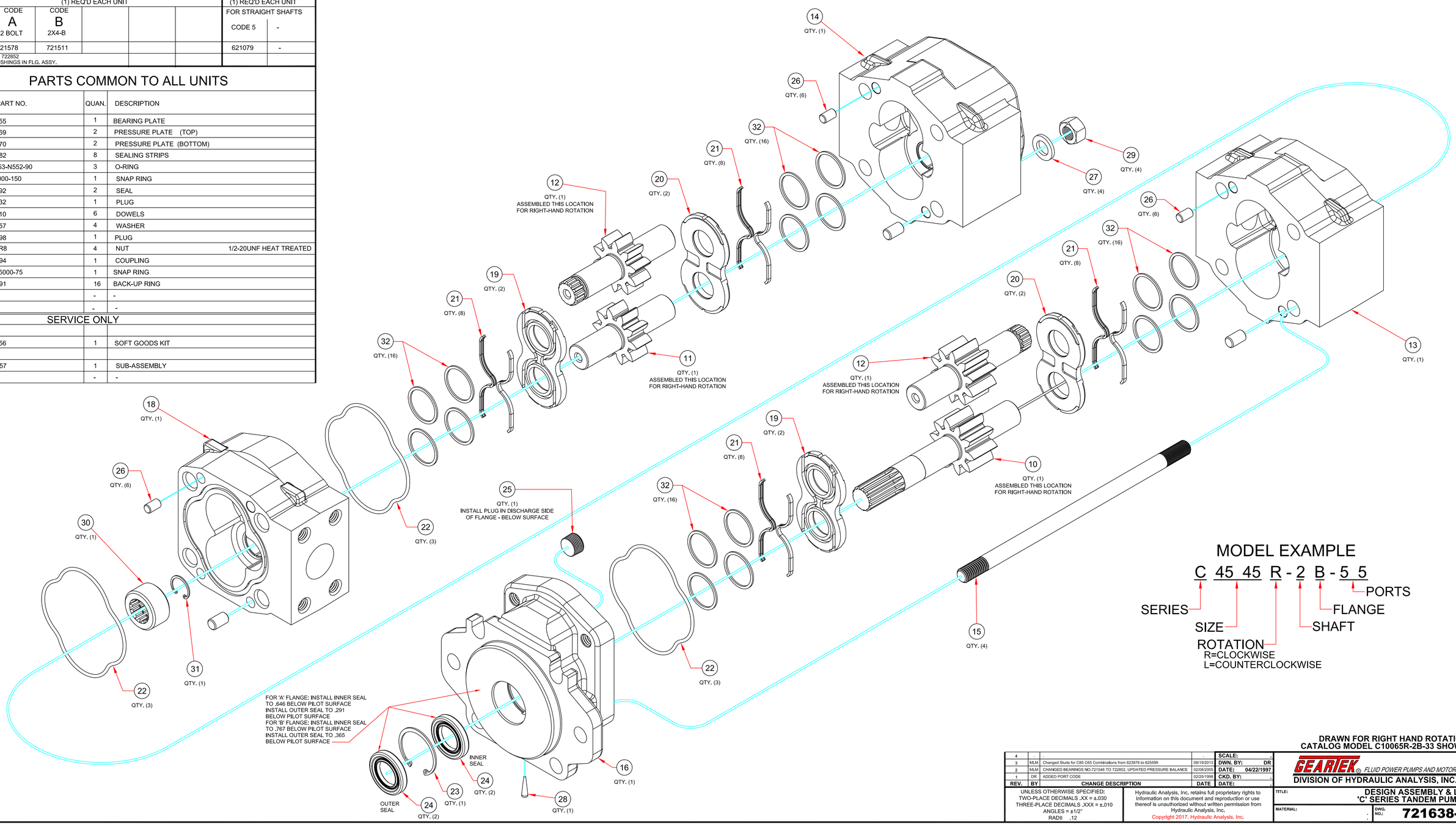

MODEL EXAMPLE

C 45 45 R - 2 B - 5 5

SERIES — SIZE — ROTATION (R=CLOCKWISE, L=COUNTERCLOCKWISE) — SHAFT — FLANGE — PORTS

DRAWN FOR RIGHT HAND ROTATION
CATALOG MODEL C10065R-2B-33 SHOWN

REV.	BY	CHANGE DESCRIPTION	DATE
4	.	.	.
3	MLM	Changed Studs for C85 C65 Combinations from 623976 to 625599	08/19/2013
2	MLM	CHANGED BEARINGS NO.721546 TO 722852, UPDATED PRESSURE BALANCE	02/08/2005
1	DR	ADDED PORT CODE	02/25/1998

SCALE: . DWN. BY: DR DATE: 04/22/1997 CKD. BY: . DATE: .

UNLESS OTHERWISE SPECIFIED:
TWO-PLACE DECIMALS .XX = ±.030
THREE-PLACE DECIMALS .XXX = ±.010
ANGLES = ±1/2°
RADII .12

Hydraulic Analysis, Inc. retains full proprietary rights to information on this document and reproduction or use thereof is unauthorized without written permission from Hydraulic Analysis, Inc.
Copyright 2017, Hydraulic Analysis, Inc.

GEARTEK® FLUID POWER PUMPS AND MOTORS
DIVISION OF HYDRAULIC ANALYSIS, INC.

TITLE: DESIGN ASSEMBLY & L/M 'C' SERIES TANDEM PUMPS

MATERIAL: . DWG. NO.: **721638-3**

DWG. NO.: **721807-3**

SIZE	10 DRIVE GEARS (1) REQ'D EACH UNIT CODE 2 7/8 SPLINE	CODE 5 7/8 STR.		11 IDLER GEARS (1) REQ'D FOR REAR SECTION ONLY	12 REAR DRIVE GEARS (1) REQ'D FRONT SECTION (2) REQ'D CENTER SECTION (1) REQ'D REAR SECTION	13 FRONT BODY CODE 3 SAE 4-BOLT (2) BUSHINGS 722852 INCLUDED IN BODY ASS'Y.	13 FRONT BODY CODE 5 ST. THREAD O'RING BOSS (2)BUSHINGS 722852 INCLUDED IN BODY ASS'Y.	BLANK FRONT BODY FOR PARTS ORDERS ONLY (2)BUSHINGS 722852 INCLUDED IN BODY ASS'Y.	13 CENTER BODY CODE 3 SAE 4-BOLT (2) BUSHINGS 722852 INCLUDED IN BODY ASS'Y.	13 CENTER BODY CODE 5 ST. THREAD O'RING BOSS (2)BUSHINGS 722852 INCLUDED IN BODY ASS'Y.	BLANK CENTER BODY FOR PARTS ORDERS ONLY (2)BUSHINGS 722852 INCLUDED IN BODY ASS'Y.	14 REAR BODY CODE 3 SAE 4-BOLT (2) BUSHINGS 722852 INCLUDED IN BODY ASS'Y.	14 REAR BODY CODE 5 ST. THREAD O'RING BOSS (2)BUSHINGS 722852 INCLUDED IN BODY ASS'Y.	BLANK REAR BODY FOR PARTS ORDERS ONLY (2)BUSHINGS 722852 INCLUDED IN BODY ASS'Y.
C45	721571	721590		721560	721581	721640	721648	721630	721640	721648	721630	721658	721666	721538
C65	721572	721591		721561	721582	721641	721649	721631	721641	721649	721631	721659	721667	721601
C85	721547	721592		721548	721583	721642	721650	721632	721642	721650	721632	721660	721668	721602
C100	721573	721593		721562	721584	721643	721651	721633	721643	721651	721633	721661	721669	721603
C115	721574	721594		721563	721585	721644	721652	721634	721644	721652	721634	721662	721670	721604
C150	721575	721595		721564	721586	721645	721653	721635	721645	721653	721635	721663	721671	721605
C180	721576	721596		721565	721587	721646	721654	721636	721646	721654	721636	721664	721672	721606
C200	721577	721597		721566	721588	721647	721655	721637	721647	721655	721637	721665	721673	721536

16 FLANGES (1) REQ'D EACH UNIT					KEYS (1) REQ'D EACH UNIT FOR STRAIGHT SHAFTS	
CODE A 2 BOLT	CODE B 2X4-B				CODE 5	-
721578	721511				621079	-
(2) 722852 BUSHINGS IN FLG. ASSY.						

PARTS COMMON TO ALL UNITS

ITEM NO.	PART NO.	QUAN.	DESCRIPTION
18	721555	2	BEARING PLATE
19	721569	3	PRESSURE PLATE (TOP)
20	721570	3	PRESSURE PLATE (BOTTOM)
21	721682	12	SEALING STRIPS
22	66-153-N552-90	5	O-RING
23	69-5000-150	1	SNAP RING
24	625992	2	SEAL
25	720932	1	PLUG
26	627110	10	DOWELS
27	622257	4	WASHER
28	626698	1	PLUG
29	60-HR8	4	NUT 1/2-20UNF HEAT TREATED
30	626394	2	COUPLING
31	69-N5000-75	2	SNAP RING
32	721691	24	BACK-UP RING
-	-	-	-
34	66-906-6-N552-90	4	O-RING (STUD STABILIZERS)
	SERVICE ONLY		
	721698	1	SOFT GOODS KIT
	721699	1	SUB-ASSEMBLY
	-	-	-

15 STUDS

(4) REQUIRED EACH PUMP

SIZE	STUD #	SIZE	STUD #	SIZE	STUD #	SIZE	STUD #
C45-45-45	622694	C115-100-85	626690	C180-115-45	626714	C200-180-45	626718
C65-45-45	623585	C115-115-85	626713	C180-150-45	626716	C200-200-45	625546
C65-65-45	623071	C115-100-100	626713	C180-180-45	626716	C200-65-65	626713
C65-65-65	623071	C115-115-100	626713	C180-65-65	626713	C200-85-65	626714
C85-45-45	623071	C115-115-115	626714	C180-85-65	626713	C200-100-65	626715
C85-65-45	623071	C150-45-45	623589	C180-100-65	626715	C200-115-65	626716
C85-85-45	623588	C150-65-45	623589	C180-115-65	626715	C200-150-65	626717
C85-65-65	623588	C150-85-45	626690	C180-150-65	626716	C200-180-65	625546
C85-85-65	623587	C150-100-45	626690	C180-180-65	626718	C200-200-65	626719
C85-85-85	623589	C150-115-45	626713	C180-85-85	626714	C200-85-85	626715
C100-45-45	623071	C150-150-45	626714	C180-100-85	626715	C200-100-85	626716
C100-65-45	623588	C150-65-65	626690	C180-115-85	626716	C200-115-85	626716
C100-85-45	623587	C150-85-65	626690	C180-150-85	626717	C200-150-85	625546
C100-100-45	623589	C150-100-65	626713	C180-180-85	623461	C200-180-85	626719
C100-65-65	623587	C150-115-65	626713	C180-100-100	626716	C200-200-85	622059
C100-85-65	623589	C150-150-65	626715	C180-115-100	626716	C200-100-100	626716
C100-100-65	624519	C150-85-85	626713	C180-150-100	626718	C200-115-100	626718
C100-85-85	624519	C150-100-85	626714	C180-180-100	625546	C200-150-100	625546
C100-100-85	626690	C150-115-85	626714	C180-115-115	626717	C200-180-100	622059
C100-100-100	626690	C150-150-85	626716	C180-150-115	625546	C200-200-100	622059
C115-45-45	623588	C150-100-100	626714	C180-180-115	626719	C200-115-115	626718
C115-65-45	623587	C150-115-100	626715	C180-150-150	626719	C200-150-115	626719
C115-85-45	623589	C150-150-100	626716	C180-180-150	622059	C200-180-115	622059
C115-100-45	624519	C150-115-115	626690	C180-180-180	721815	C200-200-115	622059
C115-115-45	624519	C150-150-115	626717	C200-45-45	626690	C200-150-150	622059
C115-65-65	623589	C150-150-150	625546	C200-65-45	626713	C200-180-150	622059
C115-85-65	624519	C180-45-45	624519	C200-85-45	626713	C200-200-150	721815
C115-100-65	624519	C180-65-45	626690	C200-100-45	626714	C200-180-180	622059
C115-115-65	626690	C180-85-45	626713	C200-115-45	626715	C200-200-180	721816
C115-85-85	626690	C180-100-45	626713	C200-150-45	626716	C200-200-200	721816

MODEL EXAMPLE

C 45 45 45 R - 2 B - 5 5 5

SERIES — SIZE — ROTATION (R=CLOCKWISE, L=COUNTERCLOCKWISE) — SHAFT — FLANGE — PORTS

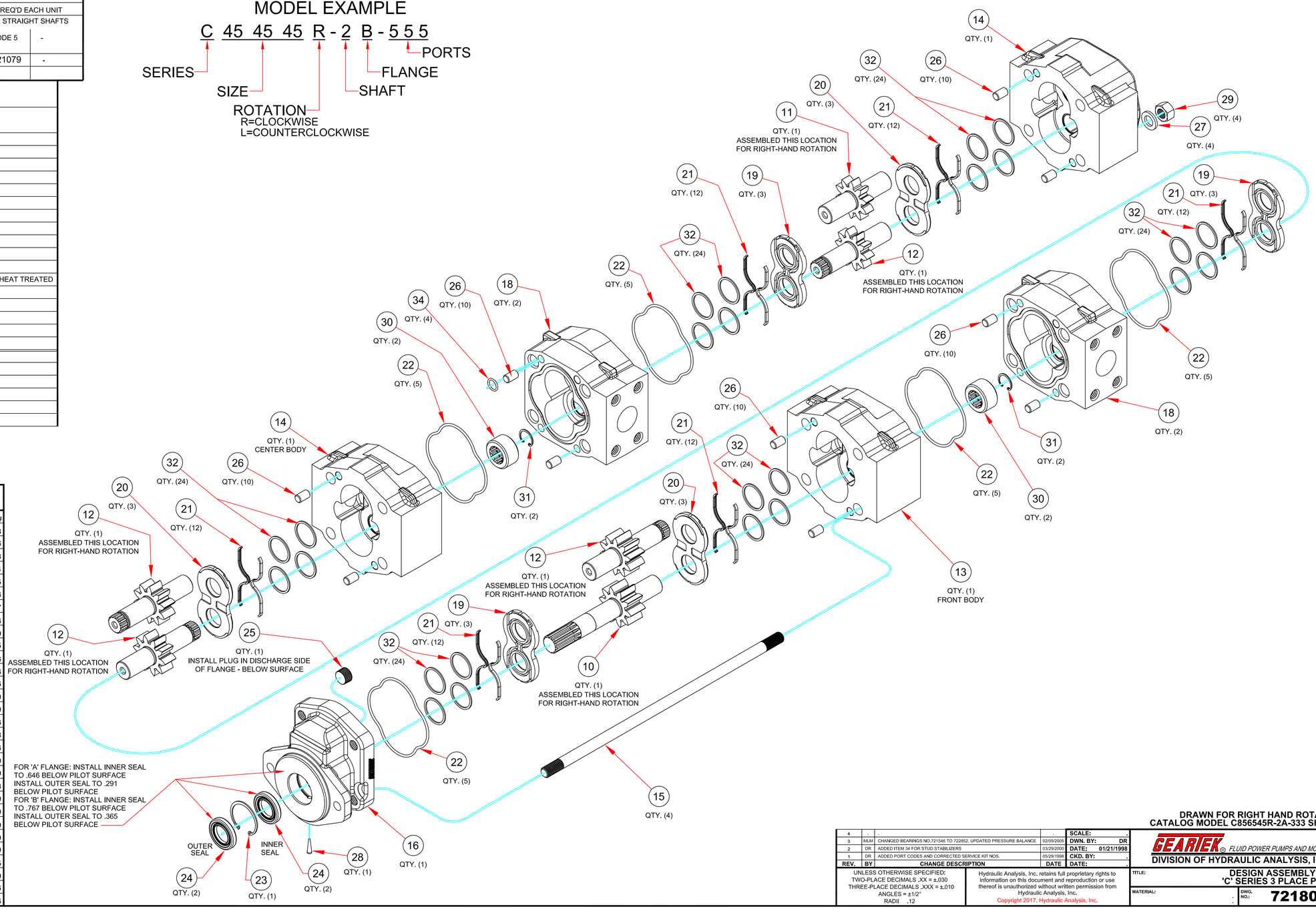

DRAWN FOR RIGHT HAND ROTATION
CATALOG MODEL C856545R-2A-333 SHOWN

REV.	BY	CHANGE DESCRIPTION	DATE
4	.	.	.
3	MLM	CHANGED BEARINGS NO.721546 TO 722852, UPDATED PRESSURE BALANCE	02/09/2005
2	DR	ADDED ITEM 34 FOR STUD STABILIZERS	03/29/2000
1	DR	ADDED PORT CODES AND CORRECTED SERVICE KIT NOS.	05/29/1998

SCALE: . | DWN. BY: DR | DATE: 01/21/1998 | CKD. BY: . | DATE: .

UNLESS OTHERWISE SPECIFIED:
TWO-PLACE DECIMALS .XX = ±.030
THREE-PLACE DECIMALS .XXX = ±.010
ANGLES = ±1/2°
RADII .12

Hydraulic Analysis, Inc. retains full proprietary rights to information on this document and reproduction or use thereof is unauthorized without written permission from Hydraulic Analysis, Inc.
Copyright 2017, Hydraulic Analysis, Inc.

GEARTEK® FLUID POWER PUMPS AND MOTORS
DIVISION OF HYDRAULIC ANALYSIS, INC.

TITLE: **DESIGN ASSEMBLY & L/M 'C' SERIES 3 PLACE PUMPS**

MATERIAL: . | DWG. NO.: **721807-3**

DWG. NO.: **724392-2**

SIZE	10 DRIVE GEAR (1) REQUIRED EACH UNIT CODE 1 5/8-9 SPLINE	CODE 2 7/8-13 SPLINE	CODE 5 7/8" KEYED	CODE 6 3/4" KEYED	- -	11 IDLER GEAR (1) REQUIRED EACH UNIT	12 BODIES CODE 3 SAE 4-BOLT (2) BEARINGS 722852 INCLUDED IN BODY ASSEMBLY	12 BODIES CODE 5 ST. THREAD O'RING BOSS (2) BEARINGS 722852 INCLUDED IN BODY ASSEMBLY	BODIES BLANK PORT BODIES FOR PARTS ORDERS ONLY (2) BEARINGS 722852 INCLUDED IN BODY ASSEMBLY	13 STUDS (4) REQUIRED EACH UNIT
CB45	722074	721571	721590	721677	-	721581	724386	723981	721630	622869
CB65	722079	721572	721591	721678	-	721582	724070	724391	721631	622864
CB85	721813	721547	721592	721679	-	721583	724117	724173	721632	625593
CB100	722075	721573	721593	721680	-	721584	723794	724275	721633	622763
CB115	-	721574	721594	721681	-	721585	724388	724194	721634	625594
CB150	-	721575	721595	-	-	721586	724256	723604	721635	622560
CB180	-	721576	721596	-	-	721587	724389	724259	721636	622766
CB200	-	721577	721597	-	-	721588	724390	724251	721637	724393

14 FLANGE (1) REQUIRED EACH UNIT CODE A 2-BOLT 'A'	CODE B 2 & 4 BOLT 'B'	- -	- -	KEYS (1) REQ'D EACH UNIT FOR STRAIGHT SHAFTS CODE 5	CODE 6	15 REAR ADAPTER (1) REQUIRED EACH UNIT CODE A-A 2 BOLT 'A'	CODE A 2 BOLT 'A'	16 COUPLING (1) REQUIRED EACH UNIT CODE 58 5/8-11 SPLINE	CODE 78 7/8-13 SPLINE	17 SNAP RING (1) REQUIRED EACH UNIT FOR CODE 58 COUPLING	FOR CODE 78 COUPLING	18 O-RING (1) REQUIRED EACH UNIT FOR CODE A ADAPTER	- -
721578	721511	-	-	621079	621623	725788	722380	722820	626394	69-N5000-51	69-N5000-75	66-042-N674-70	-
(2) BEARINGS 722852 IN FLANGE ASSEMBLY						(2) CAPSCREWS 73D-6-10H - (2) WASHERS 723323	(2) CAPSCREWS 62D-6-14H (2) NUTS 59HR6 (2) WASHERS 723323						

LIST OF MATERIAL

ITEM NO.	PART NO.	QTY.	DESCRIPTION
-	-	-	- -
20	721569	1	PRESSURE PLATE (TOP)
21	721570	1	PRESSURE PLATE (BOTTOM)
22	721682	4	SEALING STRIP -
23	66-153-N552-90	2	O-RINGS -
-	-	-	- -
25	69-5000-150	1	SNAP RING -
-	-	-	- -
27	625992	2	SEALS -
28	721691	8	BACK-UP RINGS -
29	720932	1	PLUG -
30	627110	4	DOWELS -
31	622257	4	WASHERS -
32	626698	1	PLUG -
33	60-HR8	4	NUTS -

FOR SERVICE ONLY

	722381	1	SOFT GOODS KIT
	722382	1	SUB-ASSEMBLY KIT

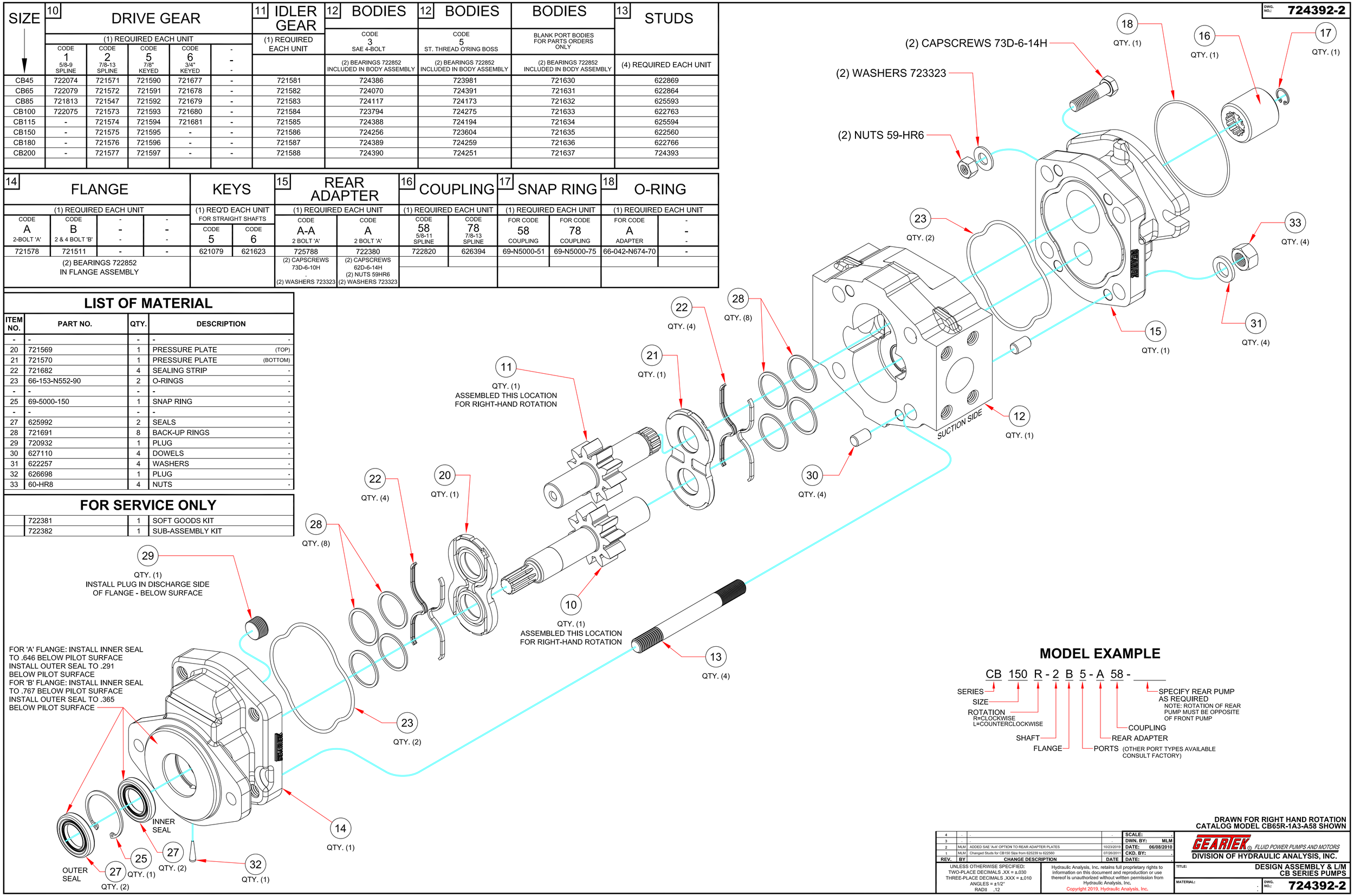

MODEL EXAMPLE

CB 150 R - 2 B 5 - A 58 - _____

- SERIES: CB
- SIZE: 150
- ROTATION: R=CLOCKWISE, L=COUNTERCLOCKWISE
- SHAFT: 2
- FLANGE: B
- PORTS: 5 (OTHER PORT TYPES AVAILABLE CONSULT FACTORY)
- REAR ADAPTER: A
- COUPLING: 58
- SPECIFY REAR PUMP AS REQUIRED — NOTE: ROTATION OF REAR PUMP MUST BE OPPOSITE OF FRONT PUMP

DRAWN FOR RIGHT HAND ROTATION
CATALOG MODEL CB65R-1A3-A58 SHOWN

REV.	BY	CHANGE DESCRIPTION	DATE
4	.	.	.
3	.	.	.
2	MLM	ADDED SAE 'A-A' OPTION TO REAR ADAPTER PLATES	10/23/2019
1	MLM	Changed Studs for CB150 Size from 625239 to 622560	07/26/2011

SCALE: . DWN. BY: MLM DATE: 06/08/2010 CKD. BY: . DATE: .

GEARTEK® FLUID POWER PUMPS AND MOTORS
DIVISION OF HYDRAULIC ANALYSIS, INC.

UNLESS OTHERWISE SPECIFIED:
TWO-PLACE DECIMALS .XX = ±.030
THREE-PLACE DECIMALS .XXX = ±.010
ANGLES = ±1/2°
RADII .12

Hydraulic Analysis, Inc. retains full proprietary rights to information on this document and reproduction or use thereof is unauthorized without written permission from Hydraulic Analysis, Inc.
Copyright 2019, Hydraulic Analysis, Inc.

TITLE: DESIGN ASSEMBLY & L/M CB SERIES PUMPS
MATERIAL: .
DWG. NO.: 724392-2

	10	DRIVE GEARS	11	IDLER GEARS	12	BODIES	13	PLUGS	14	STUDS							
	(1) REQ'D EACH SECTION		(1) REQ'D EACH SECTION		(1) REQ'D EACH SECTION		(1) REQUIRED EACH SECTION		(4) REQUIRED EACH UNIT								
SIZE					(2) BUSHINGS NO. 722852 INCLUDED IN BODY ASS'Y				2nd SECTION SIZE								
									CFD45	CFD65	CFD85	CFD100	CFD115	CFD150	CFD180	CFD200
CFD45	721581		721560		721722		6408-HHP-12-0		625364	625364	622817	622817	622817	622817	722424	722424
CFD65	721582		721561		721723		6408-HHP-16-0		625364	622817	622817	622817	622817	722424	722424	722424
CFD85	721583		721548		721724		6408-HHP-16-0		622817	622817	622817	622817	622817	722424	722424	722424
CFD100	721584		721562		721725		6408-HHP-16-0		622817	622817	622817	622817	722424	722424	722424	722424
CFD115	721585		721563		721726		6408-HHP-20-0		622817	622817	622817	722424	722424	722424	722424	625382
CFD150	721586		721564		721727		6408-HHP-20-0		622817	722424	722424	722424	722424	722424	625382	625382
CFD180	721587		721565		721728		6408-HHP-20-0		722424	722424	722424	722424	722424	625382	625382	625382
CFD200	721588		721566		721729		6408-HHP-20-0		722424	722424	722424	722424	625382	625382	625382	625382

PARTS COMMON TO ALL UNITS

ITEM NO.	PART NO.	QTY.	DESCRIPTION	
15	721836	1	BEARING PLATE	(2) BUSHINGS NO. 722852 IN BEARING PLATE ASSEMBLY
16	722008	1	BEARING PLATE	(2) BUSHINGS NO. 722852 IN BEARING PLATE ASSEMBLY
17	721569	2	PRESSURE PLATE	(TOP)
18	721570	2	PRESSURE PLATE	(BOTTOM)
19	721682	8	SEALING STRIP	-
20	721691	16	BACK-UP RING	-
21	721885	2	MOUNTING ADAPTER	-
22	724079	1	COUPLING	-
23	627110	6	DOWELS	-
24	6410-20-16-0	1	ADAPTER	-
25	6408-HHP-20-0	1	PLUG	-
26	66-906-20-N552-90	1	O-RING	-
27	66-153-N552-90	3	O-RING	-
28	622257	12	WASHER	-
29	60-HR8	8	NUT	-
30	6408-HHP-6-0	2	PLUGS	-
-	722555	1	SUB-ASSEMBLY	-
-	722556	1	SOFT GOODS KIT	-
-	-	-	-	-

DWG. NO.: **722405-6**

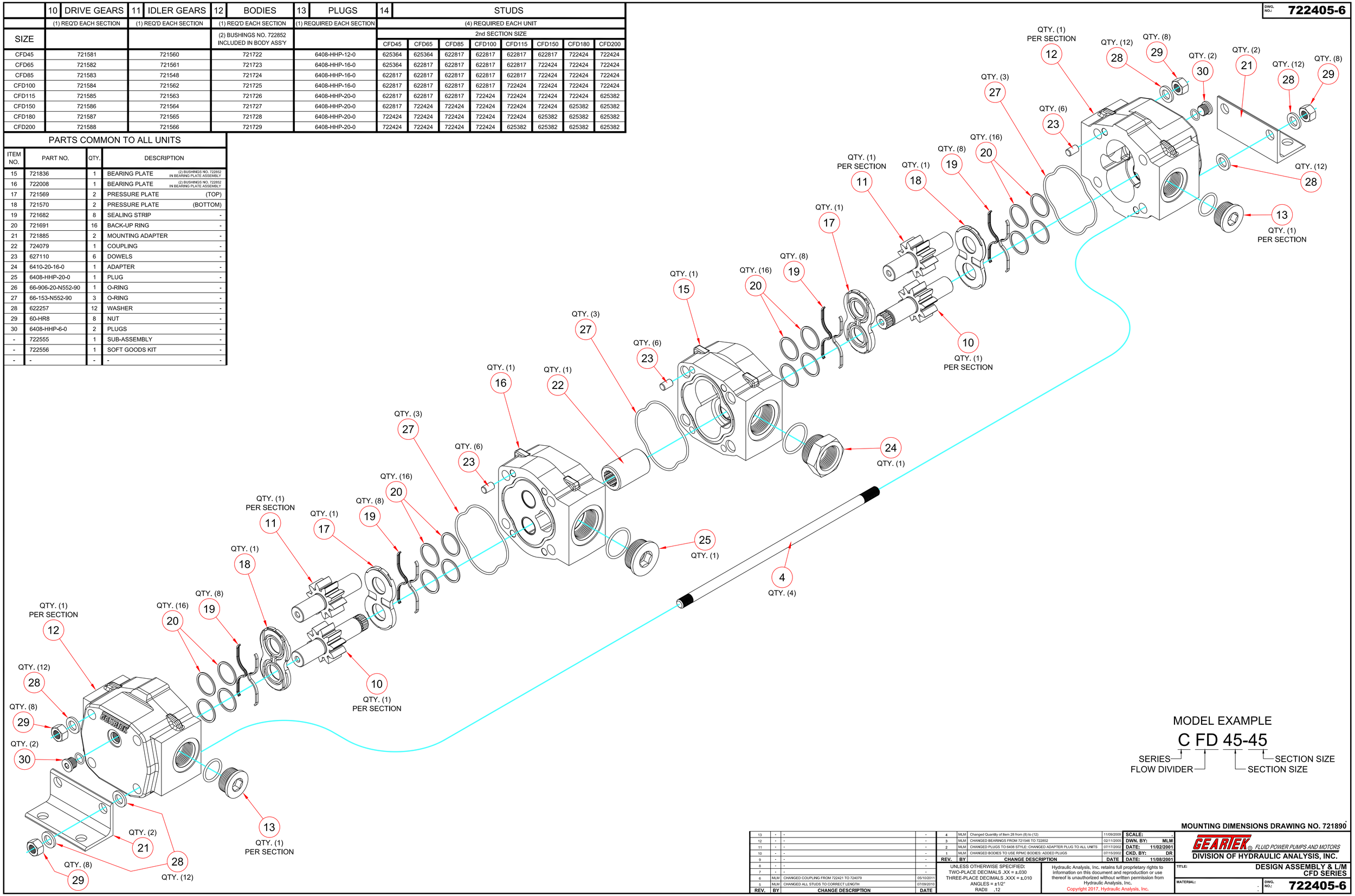

MODEL EXAMPLE

C FD 45-45

SERIES
FLOW DIVIDER
SECTION SIZE
SECTION SIZE

MOUNTING DIMENSIONS DRAWING NO. 721890

REV.	BY	CHANGE DESCRIPTION	DATE
13	-	-	-
12	-	-	-
11	-	-	-
10	-	-	-
9	-	-	-
8	-	-	-
7	-	-	-
6	MLM	CHANGED COUPLING FROM 722421 TO 724079	05/10/2011
5	MLM	CHANGED ALL STUDS TO CORRECT LENGTH	07/09/2010
4	MLM	Changed Quantity of Item 28 from (8) to (12)	11/09/2009
3	MLM	CHANGED BEARINGS FROM 721546 TO 722852	02/11/2005
2	MLM	CHANGED PLUGS TO 6408 STYLE; CHANGED ADAPTER PLUG TO ALL UNITS	07/17/2002
1	MLM	CHANGED BODIES TO USE RPMC BODIES; ADDED PLUGS	07/15/2002

UNLESS OTHERWISE SPECIFIED:
TWO-PLACE DECIMALS .XX = ±.030
THREE-PLACE DECIMALS .XXX = ±.010
ANGLES = ±1/2°
RADII .12

Hydraulic Analysis, Inc. retains full proprietary rights to Information on this document and reproduction or use thereof is unauthorized without written permission from Hydraulic Analysis, Inc.
Copyright 2017, Hydraulic Analysis, Inc.

SCALE: -
DWN. BY: MLM
DATE: 11/02/2001
CKD. BY: DR
DATE: 11/08/2001

GEARTEK® FLUID POWER PUMPS AND MOTORS
DIVISION OF HYDRAULIC ANALYSIS, INC.

TITLE: DESIGN ASSEMBLY & L/M CFD SERIES

MATERIAL: -

DWG. NO.: 722405-6

DWG. NO.: **723846-2**

SIZE	10 DRIVE GEARS (1) REQ'D EACH UNIT CODE 1 5/8 SPLINE	CODE 2 7/8 SPLINE	CODE 5 7/8 STR.	CODE 6 3/4 STR.	11 IDLER GEARS (1) REQ'D EACH UNIT	12 BODIES CODE 3 SAE 4-BOLT (2) BUSHINGS 722852 INCLUDED IN BODY ASS'Y.	12 BODIES CODE 5 SIDE ST. THREAD O'RING BOSS (2)BUSHINGS 722852 INCLUDED IN BODY ASS'Y.	BODIES BLANK PORT BODIES FOR PARTS ORDERS ONLY (2)BUSHINGS 722852 INCLUDED IN BODY ASS'Y.	13 CAPSCREWS HEX HEAD FOR NO. 3 & 5 BODIES (4) REQUIRED EACH PUMP
CX45	722074	721571	721590	721677	721560	723841	723863	721538	73D-8-40HG8
CX65	722079	721572	721591	721678	721561	723856	723864	721601	73D-8-40HG8
CX85	721813	721547	721592	721679	721548	723857	723865	721602	73D-8-42HG8
CX100	722075	721573	721593	721680	721562	723858	723866	721603	73D-8-44HG8
CX115	------	721574	721594	721681	721563	723859	723867	721604	73D-8-44HG8
CX150	------	721575	721595	------	721564	723860	723868	721605	73D-8-50HG8
CX180	------	721576	721596	------	721565	723861	723869	721606	73D-8-52HG8
CX200	------	721577	721597	------	721566	723862	723870	721536	73D-8-54HG8

14 FLANGES (1) REQ'D EACH UNIT CODE A 2 BOLT	CODE B 2X4-B	CODE P PTO FOR #2 SHAFT	CODE R 6-BOLT	KEYS (1) REQ'D EACH UNIT FOR STRAIGHT SHAFTS CODE 5	CODE 6	33 RELIEF VALVE CARTRIDGE (1) REQ'D EACH UNIT FOR 100 THRU 1000 PSI	FOR 1000 THRU 3000 PSI
721578	721511	721793	721897	621079	621623	724397	723731
(2) 722852 BUSHINGS IN FLG. ASSY.							

PARTS COMMON TO ALL UNITS

ITEM NO.	PART NO.	QUAN.	DESCRIPTION
15	721569	1	PRESSURE PLATE (TOP)
16	721570	1	PRESSURE PLATE (BOTTOM)
17	721682	4	SEALING STRIP
18	66-153-N552-90	1	'O' RING
19	69-5000-150	1	SNAP RING
20	625992	1	SEAL (OUTSIDE)
21	720932	1	PLUG
22	627110	2	DOWELS
-	-	-	-
24	626698	1	PLUG
25	721691	8	BACK UP RING
26	720933	1	RETAINER
27	68-087-150-12HP	1	SEAL (INSIDE)
28	85-375	1	BALL
-	-	-	-
-	-	-	-
31	722012	1	SPRING
32	723727	1	COMPRESSION PLUG
-	-	-	-
-	-	-	-
SERVICE ONLY			
	GT5491	1	SOFT GOODS KIT
	723855	1	SUB-ASSEMBLY KIT

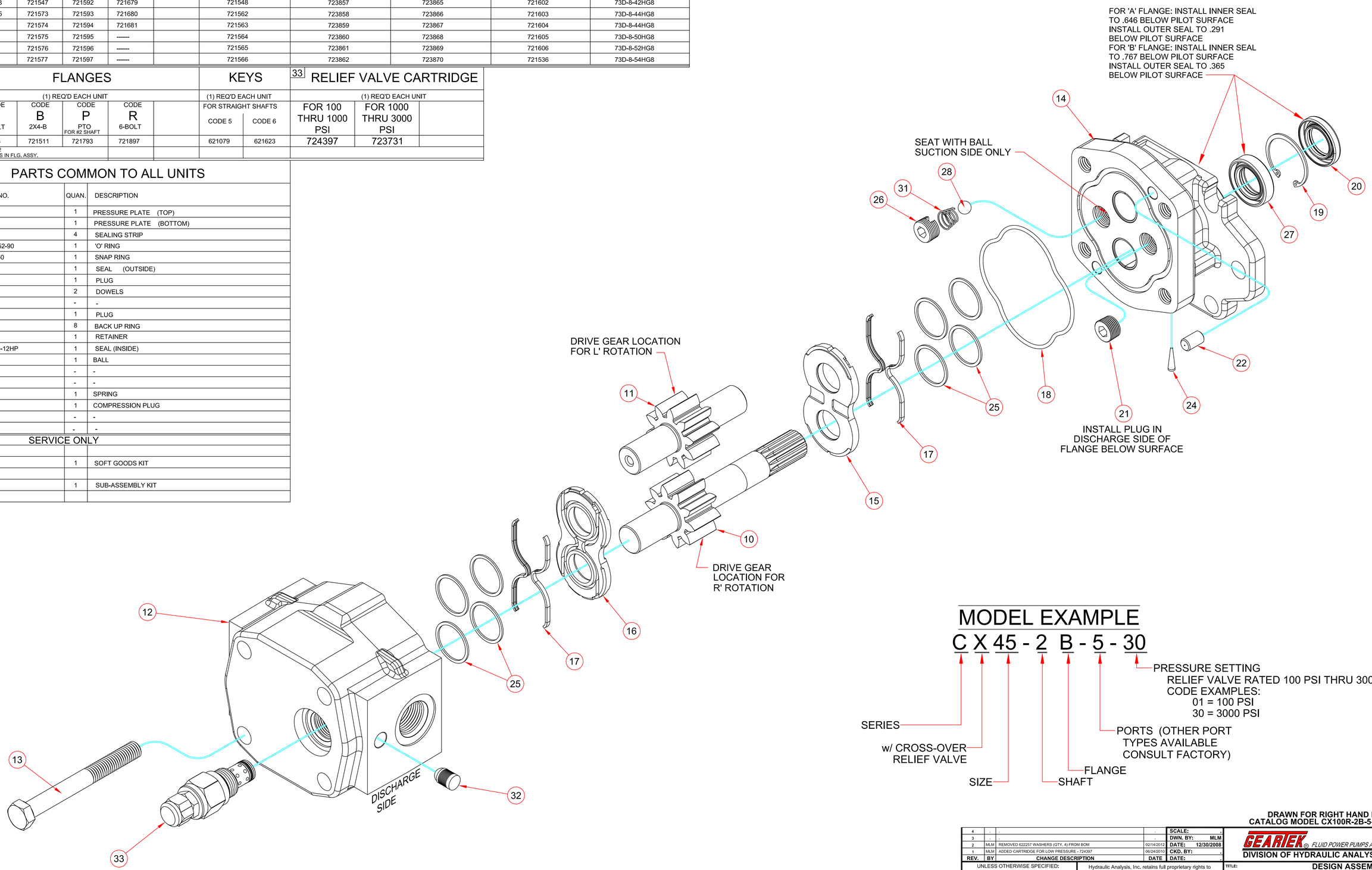

MODEL EXAMPLE

C X 45 - 2 B - 5 - 30

- SERIES
- w/ CROSS-OVER RELIEF VALVE
- SIZE
- SHAFT
- FLANGE
- PORTS (OTHER PORT TYPES AVAILABLE CONSULT FACTORY)
- PRESSURE SETTING RELIEF VALVE RATED 100 PSI THRU 3000 PSI CODE EXAMPLES: 01 = 100 PSI, 30 = 3000 PSI

DRAWN FOR RIGHT HAND ROTATION
CATALOG MODEL CX100R-2B-5- SHOWN

REV.	BY	CHANGE DESCRIPTION	DATE
4	.	.	.
3	.	.	.
2	MLM	REMOVED 622257 WASHERS (QTY. 4) FROM BOM	02/14/2012
1	MLM	ADDED CARTRIDGE FOR LOW PRESSURE - 724397	06/24/2010

SCALE: . | DWN. BY: MLM | DATE: 12/30/2008 | CKD. BY: . | DATE: .

UNLESS OTHERWISE SPECIFIED:
TWO-PLACE DECIMALS .XX = ±.030
THREE-PLACE DECIMALS .XXX = ±.010
ANGLES = ±1/2°
RADII .12

Hydraulic Analysis, Inc. retains full proprietary rights to information on this document and reproduction or use thereof is unauthorized without written permission from Hydraulic Analysis, Inc.
Copyright 2016, Hydraulic Analysis, Inc.

GEARTEK® FLUID POWER PUMPS AND MOTORS
DIVISION OF HYDRAULIC ANALYSIS, INC.

TITLE: DESIGN ASSEMBLY & L/M 'CX' SERIES SINGLE PUMPS

MATERIAL: . | DWG. NO.: 723846-2

DWG. NO.: **722549-3**

SIZE	10 DRIVE GEARS (1) REQUIRED EACH UNIT CODE 1 5/8-11T	CODE 2 7/8-13T	CODE 5 7/8" STR.	CODE 6 3/4" STR.	11 IDLER GEARS (1) REQ'D EACH UNIT	12 BODIES CODE 1 REAR ST. THREAD O'RING BOSS	12 BODIES CODE 3 SAE 4-BOLT	12 BODIES CODE 5 SIDE ST. THREAD O'RING BOSS	BODIES BLANK PORT BODIES FOR PARTS ORDERS ONLY	13 CAPSCREWS HEX HEAD FOR NO. 3 & 5 BODIES (4) REQUIRED EACH PUMP	13 CAPSCREWS SOCKET HEAD FOR NO. 1 BODIES (4) REQUIRED EACH PUMP
						(2) BUSHINGS 722852 INCLUDED IN BODY ASS'Y.	(2) BUSHINGS 722852 INCLUDED IN BODY ASS'Y.	(2)BUSHINGS 722852 INCLUDED IN BODY ASS'Y.	(2)BUSHINGS 722852 INCLUDED IN BODY ASS'Y.		
C45	722074	721571	721590	721677	721560	721732	721610	721617	721538	73D-8-40HG8	73B-8-40HG8
C65	722079	721572	721591	721678	721561	721733	721611	721618	721601	73D-8-42HG8	73B-8-40HG8
C85	721813	721547	721592	721679	721548	721734	721612	721619	721602	73D-8-44HG8	73B-8-42HG8
C100	722075	721573	721593	721680	721562	721735	721613	721620	721603	73D-8-44HG8	73B-8-44HG8
C115	------	721574	721594	721681	721563	721736	721614	721621	721604	73D-8-46HG8	73B-8-44HG8
C150	------	721575	721595	------	721564	721737	721615	721622	721605	73D-8-50HG8	73B-8-50HG8
C180	------	721576	721596	------	721565	721738	721616	721623	721606	73D-8-54HG8	73B-8-52HG8
C200	------	721577	721597	------	721566	721739	721537	721624	721536	73D-8-54HG8	73B-8-54HG8

14 FLANGES (1) REQUIRED EACH UNIT CODE A 2 BOLT	CODE B 2 & 4 BOLT	CODE P PTO for # 2 SHAFT	CODE R 6 BOLT	KEYS (1) REQ'D EACH UNIT FOR STRAIGHT SHAFTS CODE 5	CODE 6
721578	721511	721793	721897	621079	621623
(2) BEARINGS 722852 IN FLANGE ASSEMBLY					

PARTS COMMON TO ALL UNITS

ITEM NO.	PART NO.	QTY.	DESCRIPTION
15	721569	1	PRESSURE PLATE (TOP)
16	721570	1	PRESSURE PLATE (BOTTOM)
17	721986	4	SEALING STRIP
18	66-153-N552-90	1	'O' RING
19	69-5000-150	1	SNAP RING
20	625992	1	SEAL
21	720933	2	PLUG
22	627110	2	DOWELS
23	68-087-150-12HP	1	SEAL
24	626698	1	PLUG
25	721691	8	BACK UP RING
26	722012	2	SPRING
27	85-375	2	BALL

SERVICE ONLY

722552	1	SOFT GOODS KIT
722551	1	SUB-ASSY.

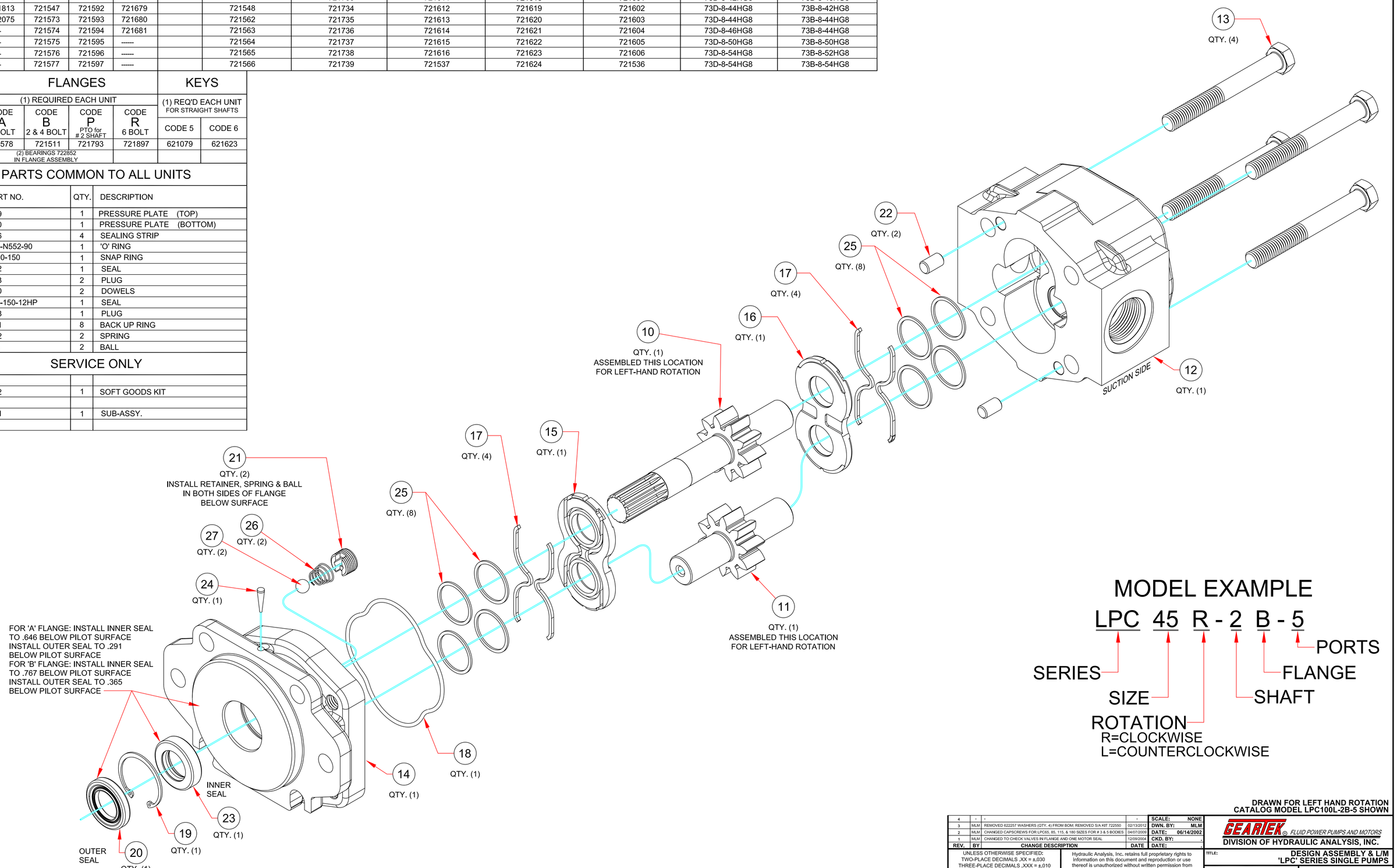

MODEL EXAMPLE

LPC 45 R - 2 B - 5

- LPC — SERIES
- 45 — SIZE
- R — ROTATION: R=CLOCKWISE, L=COUNTERCLOCKWISE
- 2 — SHAFT
- B — FLANGE
- 5 — PORTS

DRAWN FOR LEFT HAND ROTATION
CATALOG MODEL LPC100L-2B-5 SHOWN

REV.	BY	CHANGE DESCRIPTION	DATE
4	-	-	-
3	MLM	REMOVED 622257 WASHERS (QTY. 4) FROM BOM: REMOVED S/A KIT 722550	02/13/2012
2	MLM	CHANGED CAPSCREWS FOR LPC65, 85, 115, & 180 SIZES FOR # 3 & 5 BODIES	04/07/2009
1	MLM	CHANGED TO CHECK VALVES IN FLANGE AND ONE MOTOR SEAL	12/09/2004

SCALE: NONE
DWN. BY: MLM
DATE: 06/14/2002
CKD. BY: -
DATE: -

UNLESS OTHERWISE SPECIFIED:
TWO-PLACE DECIMALS .XX = ±.030
THREE-PLACE DECIMALS .XXX = ±.010
ANGLES = ±1/2°
RADII .12

Hydraulic Analysis, Inc. retains full proprietary rights to information on this document and reproduction or use thereof is unauthorized without written permission from Hydraulic Analysis, Inc.
Copyright 2017, Hydraulic Analysis, Inc.

GEARTEK® FLUID POWER PUMPS AND MOTORS
DIVISION OF HYDRAULIC ANALYSIS, INC.

TITLE: DESIGN ASSEMBLY & L/M 'LPC' SERIES SINGLE PUMPS
MATERIAL: -
DWG. NO.: 722549-3

DWG. NO.: **723845-2**

SIZE	10 DRIVE GEARS (1) REQ'D EACH UNIT				11 IDLER GEARS (1) REQ'D EACH UNIT	12 BODIES	BODIES	13 CAPSCREWS
		CODE 2 7/8 SPLINE	CODE 5 7/8 STR.	CODE 6 3/4 STR.		CODE 5 SIDE ST. THREAD O'RING BOSS	BLANK PORT BODIES FOR PARTS ORDERS ONLY	HEX HEAD FOR NO. 3 & 5 BODIES (4) REQUIRED EACH PUMP
						(2)BUSHINGS 722852 INCLUDED IN BODY ASS'Y.	(2)BUSHINGS 722852 INCLUDED IN BODY ASS'Y.	
MCX45		721571	721590	721677	721560	723847	721538	73D-8-40HG8
MCX65		721572	721591	721678	721561	723848	721601	73D-8-40HG8
MCX85		721547	721592	721679	721548	723849	721602	73D-8-42HG8
MCX100		721573	721593	721680	721562	723850	721603	73D-8-44HG8
MCX115		721574	721594	721681	721563	723851	721604	73D-8-44HG8
MCX150		721575	721595		721564	723852	721605	73D-8-50HG8
MCX180		721576	721596		721565	723853	721606	73D-8-52HG8
MCX200		721577	721597		721566	723854	721536	73D-8-54HG8

14 FLANGES (1) REQ'D EACH UNIT				KEYS (1) REQ'D EACH UNIT FOR STRAIGHT SHAFTS		32 COMPRESSSION PLUG (1) REQUIRED EACH UNIT	33 RELIEF VALVE CARTRIDGE (1) REQ'D EACH UNIT	
CODE A 2 BOLT	CODE B 2X4-B	CODE P PTO FOR #2 SHAFT	CODE R 6-BOLT	CODE 5	CODE 6		FOR 100 THRU 1000 PSI	FOR 1000 THRU 3000 PSI
721578	721511	721793	721897	621079	621623	723727	724397	723731
(2) 722852 BUSHINGS IN FLG. ASSY.								

PARTS COMMON TO ALL UNITS

ITEM NO.	PART NO.	QUAN.	DESCRIPTION
15	721569	1	PRESSURE PLATE (TOP)
16	721570	1	PRESSURE PLATE (BOTTOM)
17	721682	4	SEALING STRIP
18	66-153-N552-90	1	'O' RING
19	69-5000-150	1	SNAP RING
20	625992	1	SEAL (OUTSIDE)
21	720933	2	PLUG
22	627110	2	DOWELS
-	-	-	-
24	626698	1	PLUG
25	721691	8	BACK UP RING
-	-	-	-
27	68-087-150-12HP	1	SEAL (INSIDE)
28	85-375	2	BALL
29	6408-HHP-6-0	1	PLUG
30	66-906-06-N552-90	1	O-RING
31	722012	2	SPRING
SERVICE ONLY			
	721689	1	SOFT GOODS KIT
	721690	1	SUB-ASSEMBLY KIT

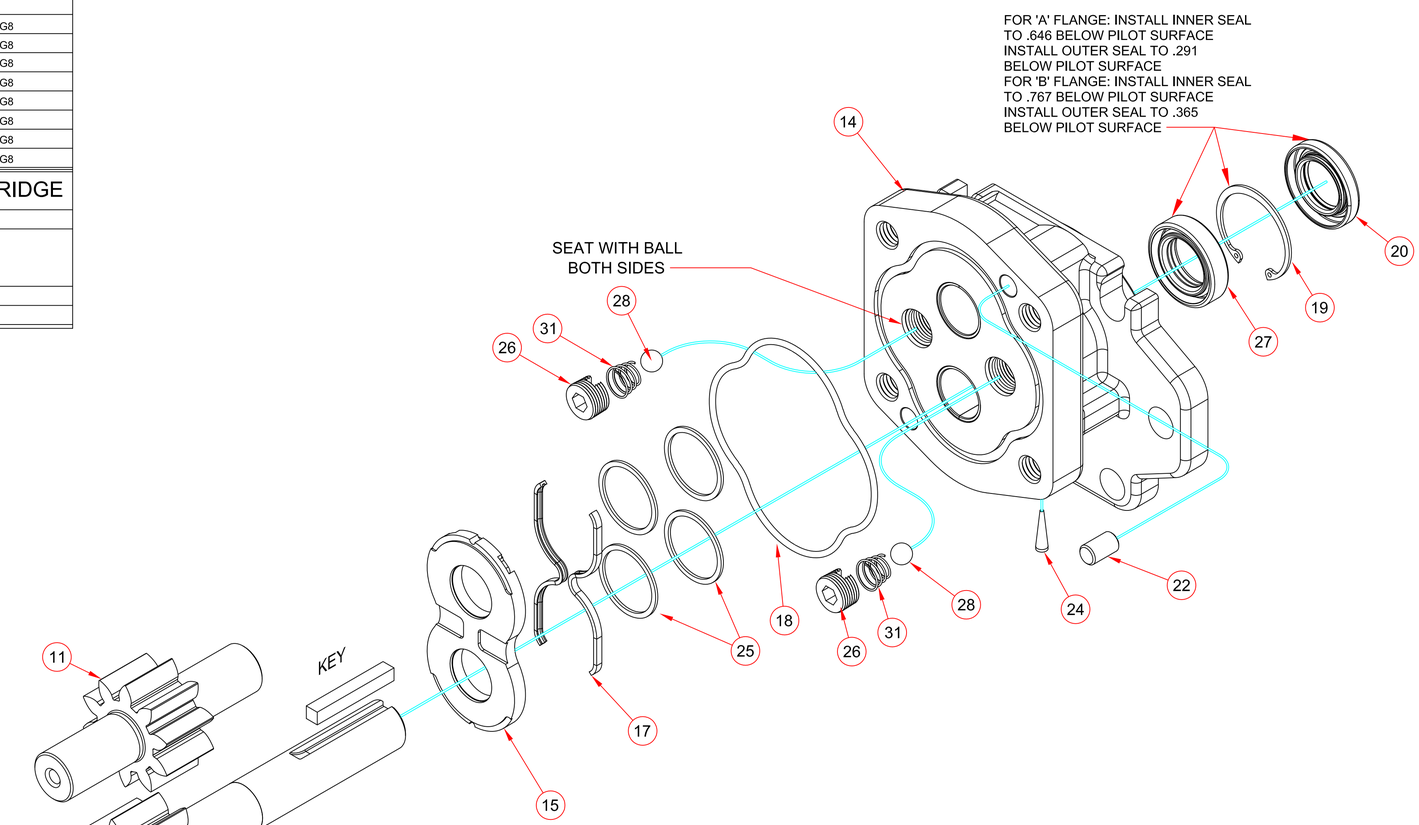

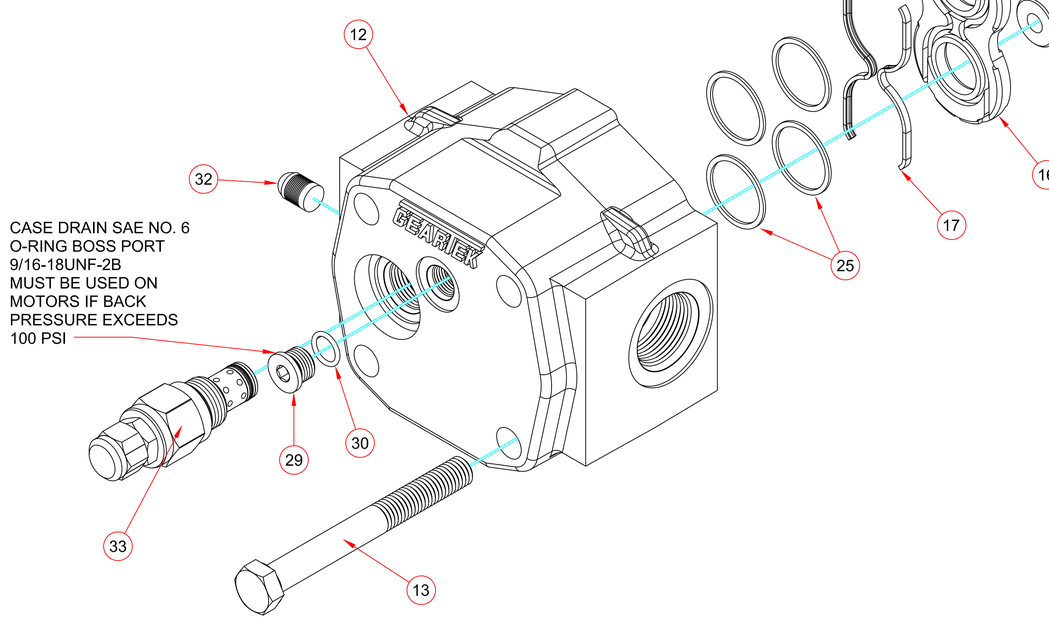

MODEL EXAMPLE

M C X 45 - 2 B - 5 - 30

- MOTOR
- SERIES
- w/ CROSS-OVER RELIEF VALVE
- SIZE
- SHAFT
- FLANGE
- PORTS (OTHER PORT TYPES AVAILABLE CONSULT FACTORY)
- PRESSURE SETTING RELIEF VALVE RATED 100 PSI THRU 3000 PSI CODE EXAMPLES: 01 = 100 PSI, 30 = 3000 PSI

CATALOG MODEL MCX100-5B-5- SHOWN**

REV.	BY	CHANGE DESCRIPTION	DATE
4	.	.	.
3	.	.	.
2	MLM	REMOVED 622257 WASHERS (QTY. 4) FROM BOM	02/14/2012
1	MLM	ADDED CARTRIDGE FOR LOW PRESSURE - 724397	06/24/2010

SCALE: .
DWN. BY: MLM
DATE: 12/30/2008
CKD. BY: .
DATE: .

UNLESS OTHERWISE SPECIFIED:
TWO-PLACE DECIMALS .XX = ±.030
THREE-PLACE DECIMALS .XXX = ±.010
ANGLES = ±1/2°
RADII .12

Hydraulic Analysis, Inc. retains full proprietary rights to information on this document and reproduction or use thereof is unauthorized without written permission from Hydraulic Analysis, Inc.
Copyright 2016. Hydraulic Analysis, Inc.

GEARTEK® FLUID POWER PUMPS AND MOTORS
DIVISION OF HYDRAULIC ANALYSIS, INC.

TITLE: DESIGN ASSEMBLY & L/M MCX SERIES MOTORS

MATERIAL: .

DWG. NO.: **723845-2**

DWG. NO.: **721713-7**

SIZE	10 DRIVE GEARS (1) REQ'D EACH UNIT				11 IDLER GEARS (1) REQ'D EACH UNIT	12 BODIES	12 BODIES	12 BODIES	BODIES	13 CAPSCREWS HEX HEAD	13 CAPSCREWS SOCKET HEAD
		CODE 2 7/8 SPLINE	CODE 5 7/8 STR.	CODE 6 3/4 STR.		CODE 1 REAR ST. THREAD O'RING BOSS	CODE 3 SAE 4-BOLT	CODE 5 SIDE ST. THREAD O'RING BOSS	BLANK PORT BODIES FOR PARTS ORDERS ONLY	FOR NO. 3 & 5 BODIES (4) REQUIRED EACH PUMP	FOR NO. 1 BODIES (4) REQUIRED EACH PUMP
						(2) BEARINGS NO. 722852 INCLUDED IN BODY ASS'Y.	(2) BEARINGS NO. 722852 INCLUDED IN BODY ASS'Y.	(2) BEARINGS NO. 722852 INCLUDED IN BODY ASS'Y.	(2) BEARINGS NO. 722852 INCLUDED IN BODY ASS'Y.		
RPMC45		721571	721590	721677	721560	721740	721714	721722	721538	73D-8-40HG8	73B-8-40HG8
RPMC65		721572	721591	721678	721561	721741	721715	721723	721601	73D-8-42HG8	73B-8-40HG8
RPMC85		721547	721592	721679	721548	721742	721716	721724	721602	73D-8-44HG8	73B-8-42HG8
RPMC100		721573	721593	721680	721562	721743	721717	721725	721603	73D-8-44HG8	73B-8-44HG8
RPMC115		721574	721594	721681	721563	721744	721718	721726	721604	73D-8-46HG8	73B-8-44HG8
RPMC150		721575	721595		721564	721745	721719	721727	721605	73D-8-50HG8	73B-8-50HG8
RPMC180		721576	721596		721565	721746	721720	721728	721606	73D-8-54HG8	73B-8-52HG8
RPMC200		721577	721597		721566	721747	721721	721729	721536	73D-8-54HG8	73B-8-54HG8

14 FLANGES (1) REQ'D EACH UNIT					KEYS (1) REQ'D EACH UNIT FOR STRAIGHT SHAFTS	
CODE A 2 BOLT	CODE B 2X4-B	CODE P PTO FOR #2 SHAFT	CODE R 6-BOLT		CODE 5	CODE 6
721578	721511	721793	721897		621079	621623
(2) 722852 BEARINGS IN FLG. ASSY.						

PARTS COMMON TO ALL UNITS

ITEM NO.	PART NO.	QTY.	DESCRIPTION
15	721569	1	PRESSURE PLATE (TOP)
16	721570	1	PRESSURE PLATE (BOTTOM)
17	721682	4	SEALING STRIP
18	66-153-N552-90	1	O-RING
19	69-5000-150	1	SNAP RING
20	625992	1	SEAL (OUTSIDE)
21	720933	2	RETAINER
22	627110	2	DOWELS
-	-	-	-
24	626698	1	PLUG
25	721691	8	BACK-UP RING
-	-	-	-
27	68-087-150-12HP	1	SEAL (INSIDE)
28	85-375	2	BALL
29	6408-HHP-6-0	1	PLUG
30	66-906-06-N552-90	1	O-RING
31	722012	2	SPRING
-	-	-	-

SERVICE ONLY

721689	1	SOFT GOODS KIT
721690	1	SUB-ASSY.

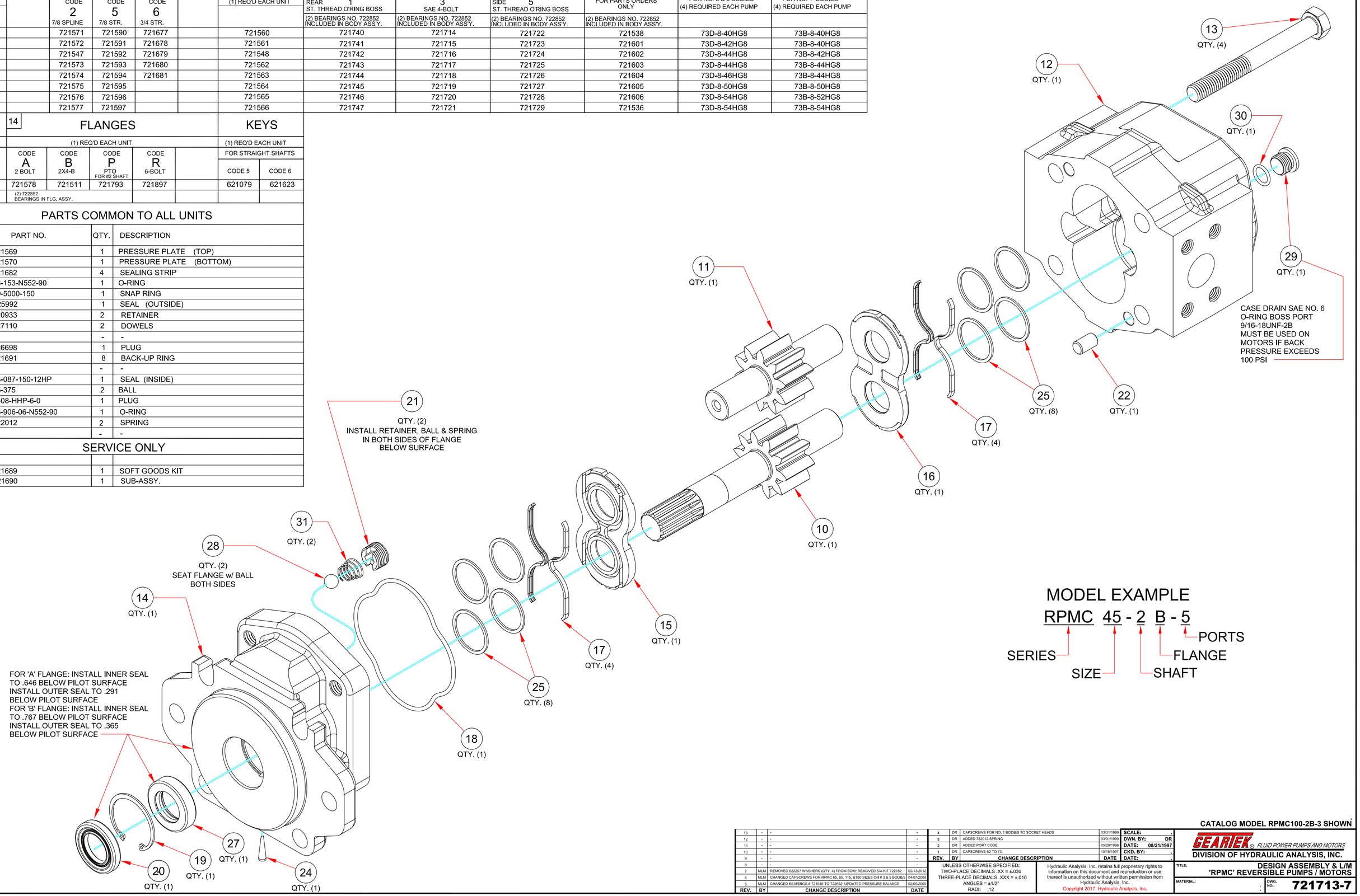

MODEL EXAMPLE

RPMC 45 - 2 B - 5

SERIES — SIZE — SHAFT — FLANGE — PORTS

CATALOG MODEL RPMC100-2B-3 SHOWN

REV.	BY	CHANGE DESCRIPTION	DATE
13	-	-	-
12	-	-	-
11	-	-	-
10	-	-	-
9	-	-	-
8	-	-	-
7	MLM	REMOVED 622257 WASHERS (QTY. 4) FROM BOM; REMOVED S/A KIT 722182	02/13/2012
6	MLM	CHANGED CAPSCREWS FOR RPMC 65, 85, 115, &180 SIZES ON # 3 & 5 BODIES	04/07/2009
5	MLM	CHANGED BEARINGS # 721546 TO 722852; UPDATED PRESSURE BALANCE	02/09/2005
4	DR	CAPSCREWS FOR NO.. 1 BODIES TO SOCKET HEADS	03/31/1999
3	DR	ADDED 722012 SPRING	03/31/1999
2	DR	ADDED PORT CODE	05/29/1998
1	DR	CAPSCREWS 62 TO 73	10/15/1997

UNLESS OTHERWISE SPECIFIED:
TWO-PLACE DECIMALS .XX = ±.030
THREE-PLACE DECIMALS .XXX = ±.010
ANGLES = ±1/2°
RADII .12

Hydraulic Analysis, Inc. retains full proprietary rights to information on this document and reproduction or use thereof is unauthorized without written permission from Hydraulic Analysis, Inc.
Copyright 2017, Hydraulic Analysis, Inc.

SCALE: . | DWN. BY: DR | DATE: 08/21/1997 | CKD. BY: . | DATE: .

GEARTEK® FLUID POWER PUMPS AND MOTORS
DIVISION OF HYDRAULIC ANALYSIS, INC.

TITLE: DESIGN ASSEMBLY & L/M 'RPMC' REVERSIBLE PUMPS / MOTORS

MATERIAL: . | DWG. NO.: 721713-7

DWG. NO.: **722758-6**

SIZE	10 DRIVE GEARS (1) REQ'D EACH UNIT				11 IDLER GEARS (1) REQ'D EACH UNIT	12 BODIES	12 BODIES	12 BODIES	BODIES	13 CAPSCREWS HEX HEAD	13 CAPSCREWS SOCKET HEAD
		CODE 2 7/8 SPLINE	CODE 5 7/8 STR.	CODE 6 3/4 STR.		CODE 1 REAR ST. THREAD O'RING BOSS	CODE 3 SAE 4-BOLT	CODE 5 SIDE ST. THREAD O'RING BOSS	BLANK PORT BODIES FOR PARTS ORDERS ONLY	FOR NO. 3 & 5 BODIES (4) REQUIRED EACH PUMP	FOR NO. 1 BODIES (4) REQUIRED EACH PUMP
						(2) BEARINGS NO. 722852 INCLUDED IN BODY ASS'Y.	(2) BEARINGS NO. 722852 INCLUDED IN BODY ASS'Y.	(2) BEARINGS NO. 722852 INCLUDED IN BODY ASS'Y.	(2) BEARINGS NO. 722852 INCLUDED IN BODY ASS'Y.		
RPMCH45		721571P	721590P	721677P	721560	721740	721714	721722	721538	73D-8-40HG8	73B-8-40HG8
RPMCH65		721572P	721591P	721678P	721561	721741	721715	721723	721601	73D-8-42HG8	73B-8-40HG8
RPMCH85		721547P	721592P	721679P	721548	721742	721716	721724	721602	73D-8-44HG8	73B-8-42HG8
RPMCH100		721573P	721593P	721680P	721562	721743	721717	721725	721603	73D-8-44HG8	73B-8-44HG8
RPMCH115		721574P	721594P	721681P	721563	721744	721718	721726	721604	73D-8-46HG8	73B-8-44HG8
RPMCH150		721575P	721595P		721564	721745	721719	721727	721605	73D-8-50HG8	73B-8-50HG8
RPMCH180		721576P	721596P		721565	721746	721720	721728	721606	73D-8-54HG8	73B-8-52HG8
RPMCH200		721577P	721597P		721566	721747	721721	721729	721536	73D-8-54HG8	73B-8-54HG8

14 FLANGES (1) REQ'D EACH UNIT					KEYS (1) REQ'D EACH UNIT FOR STRAIGHT SHAFTS	
CODE A 2 BOLT	CODE B 2X4-B	CODE P PTO FOR #2 SHAFT	CODE R 6-BOLT		CODE 5	CODE 6
721578	721511	721793	721897		621079	621623
(2) 722852 BEARINGS IN FLG. ASSY.						

PARTS COMMON TO ALL UNITS

ITEM NO.	PART NO.	QTY.	DESCRIPTION
15	721569	1	PRESSURE PLATE (TOP)
16	721570	1	PRESSURE PLATE (BOTTOM)
17	721682	4	SEALING STRIP
18	66-153-N552-90	1	O-RING
19	69-5000-150	1	SNAP RING
20	625992	1	SEAL (OUTSIDE)
21	720933	2	RETAINER
22	627110	2	DOWELS
-	-	-	-
24	626698	1	PLUG
25	721691	8	BACK-UP RING
26	722580	1	STEEL RING
27	726855	1	SEAL (INSIDE)
28	85-375	2	BALL
29	6408-HHP-6-0	1	PLUG
30	66-906-6-N552-90	1	O-RING
31	722012	2	SPRING
-	-	-	-

SERVICE ONLY

	722763	1	SOFT GOODS KIT
	722764	1	SUB-ASSY.

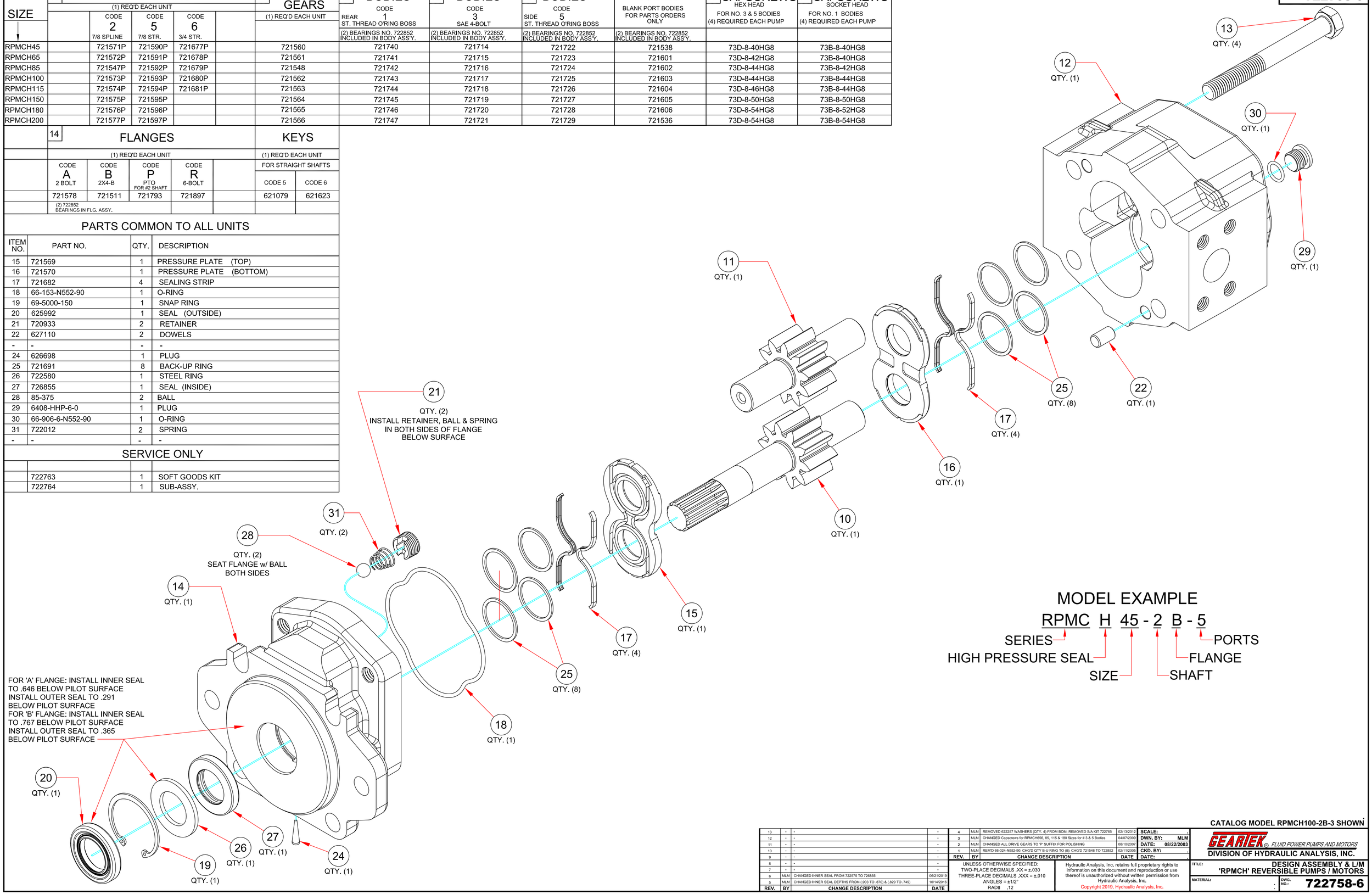

MODEL EXAMPLE

RPMC H 45 - 2 B - 5

- SERIES
- HIGH PRESSURE SEAL
- SIZE
- SHAFT
- FLANGE
- PORTS

CATALOG MODEL RPMCH100-2B-3 SHOWN

REV.	BY	CHANGE DESCRIPTION	DATE
13	-	-	-
12	-	-	-
11	-	-	-
10	-	-	-
9	-	-	-
8	-	-	-
7	-	-	-
6	MLM	CHANGED INNER SEAL FROM 722575 TO 726855	06/21/2019
5	MLM	CHANGED INNER SEAL DEPTHS FROM (.903 TO .870) & (.829 TO .749)	10/14/2016
4	MLM	REMOVED 622257 WASHERS (QTY. 4) FROM BOM; REMOVED S/A KIT 722765	02/13/2012
3	MLM	CHANGED Capscrews for RPMCH656, 85, 115 & 180 Sizes for # 3 & 5 Bodies	04/07/2009
2	MLM	CHANGED ALL DRIVE GEARS TO 'P' SUFFIX FOR POLISHING	08/10/2007
1	MLM	REM'D 66-024-N552-90; CHG'D QTY B-U RING TO (8); CHG'D 721546 TO 722852	02/11/2005

UNLESS OTHERWISE SPECIFIED:
TWO-PLACE DECIMALS .XX = ±.030
THREE-PLACE DECIMALS .XXX = ±.010
ANGLES = ±1/2°
RADII .12

Hydraulic Analysis, Inc. retains full proprietary rights to information on this document and reproduction or use thereof is unauthorized without written permission from Hydraulic Analysis, Inc.
Copyright 2019, Hydraulic Analysis, Inc.

SCALE: -
DWN. BY: MLM
DATE: 08/22/2003
CKD. BY: -
DATE: -

GEARTEK © FLUID POWER PUMPS AND MOTORS
DIVISION OF HYDRAULIC ANALYSIS, INC.

TITLE: DESIGN ASSEMBLY & L/M 'RPMCH' REVERSIBLE PUMPS / MOTORS

MATERIAL: -

DWG. NO.: **722758-6**